380/380X/381 Synergy Series

Battery Powered Digital Weight Indicators

Technical Manual

380X Synergy Series Digital Weight Indicator

380 Synergy Series Digital Weight Indicator

381 Synergy Series Digital Weight Indicator

REVOLUTION® SCALE SOFTWARE

RICE LAKE® WEIGHING SYSTEMS

August 13, 2026

PN 201481 Rev K

© Rice Lake Weighing Systems. All rights reserved.

Rice Lake Weighing Systems® is a registered trademark of
Rice Lake Weighing Systems.
All other brand or product names within this publication are trademarks or
registered trademarks of their respective companies.

All information contained within this publication is, to the best of our knowledge, complete and accurate at the time of publication. Rice Lake Weighing Systems reserves the right to make changes to the technology, features, specifications and design of the equipment without notice.

The most current version of this publication, software, firmware and all other product updates can be found on our website:

www.ricelake.com

Revision History

This section tracks and describes manual revisions for awareness of major updates.

Revision	Date	Description
D	August 10, 2022	Revision history established; clarified configuration section and general formatting updates
E	November 3, 2022	Added cord grip diameter ranges
F	April 19, 2023	Added the 381 indicator models
G	August 16, 2023	Added clarifying note about startup
H	April 22, 2024	Added the 380X indicator model
I	September 18, 2024	Updated replacement parts
J	February 29, 2026	Updated CPU board functions
K	August 13, 2026	Updated 381 indicator power connections

Table i. Revision Letter History

*Technical training seminars are available through Rice Lake Weighing Systems. Course descriptions and dates can be viewed at **www.ricelake.com/training** or obtained by calling 715-234-9171 and asking for the training department.*

Contents

1.0 Introduction . . . 7
- 1.1 Safety . . . 7
- 1.2 Options . . . 8
- 1.3 Operating Modes . . . 8
- 1.4 FCC Compliance . . . 8
- 1.5 Lithium-Ion Battery Safety . . . 9
- 1.6 Disposal . . . 10

2.0 Installation . . . 11
- 2.1 Unpacking . . . 11
- 2.2 380/380X Product Dimensions . . . 11
- 2.3 381 Product Dimensions . . . 12
- 2.4 Mounting Instructions . . . 12
- 2.5 Open Enclosure . . . 13
  - 2.5.1 380/380X Front Plate Removal . . . 13
  - 2.5.2 381 Back Cover Removal . . . 14
- 2.6 Cord Grip Connections . . . 15
  - 2.6.1 380 Cord Grip Connections (PN 202711) . . . 15
  - 2.6.2 380X Cord Grip Connections (PN 214337) . . . 16
  - 2.6.3 381-AA Cord Grip Connections (PN 215695) . . . 16
  - 2.6.4 381-NiMH Cord Grip Connections (PN 215696) . . . 17
- 2.7 380/380X Cable Shield Grounding . . . 18
- 2.8 CPU Board Connections . . . 19
  - 2.8.1 Load Cell Cable . . . 19
  - 2.8.2 380/380X RS-232 Serial Communications . . . 20
- 2.9 Power Connections . . . 20
  - 2.9.1 380 Power Connections . . . 20
  - 2.9.2 380X Power Connections . . . 21
  - 2.9.3 381-AA Power Connections . . . 22
  - 2.9.4 381-NiMH Power Connections . . . 22
- 2.10 Reassembly . . . 23
  - 2.10.1 380/380X Front Plate Reattachment . . . 23
  - 2.10.2 381 Reassembly . . . 23
- 2.11 380/380X Parts Kit Components . . . 24
- 2.12 Replacement Parts . . . 24

3.0 Operation . . . 32
- 3.1 Front Panel . . . 32
- 3.2 LCD Annunciators . . . 33
- 3.3 General Navigation . . . 33
  - 3.3.1 Numeric Value Entry . . . 34
  - 3.3.2 Alphanumeric Entry . . . 34
- 3.4 Weigh Mode Operation . . . 35
  - 3.4.1 Zero Scale . . . 35
  - 3.4.2 Print Ticket . . . 35
  - 3.4.3 Toggle Units . . . 35
  - 3.4.4 Toggle Gross/Net Mode . . . 35
  - 3.4.5 Acquire Tare . . . 35
  - 3.4.6 Remove Tare Value . . . 35

RICE LAKE WEBINARS

Rice Lake continually offers web-based video training on a growing selection of product-related topics at no cost. Visit ***www.ricelake.com/webinars***

3.4.7 Preset Tare (Keyed Tare) . . . 35
3.5 User Mode Menu . . . 36
3.5.1 Display a Stored Tare . . . 36
3.5.2 Clear a Stored Tare . . . 36
3.5.3 View Legally Relevant Version . . . 36
3.5.4 Display Accumulator . . . 36
3.5.5 Print Accumulator . . . 37
3.5.6 Clear Accumulator . . . 37
3.6 Reset (Default) Configuration . . . 37

4.0 Configuration . . . 38
4.1 Seal the Indicator . . . 38
4.1.1 Close the CAL Jumper . . . 38
4.1.2 Seal the 380/380X . . . 39
4.1.3 Seal the 381 . . . 39
4.2 Main Menu . . . 40
4.3 Setup Menu . . . 40
4.3.1 Setup – Configuration Menu . . . 41
4.3.2 Setup – Format Menu . . . 42
4.3.3 Setup – Calibration Menu . . . 42
4.3.4 Setup – Communication Menu . . . 43
4.3.5 Setup – Program Menu . . . 44
4.3.6 Setup – Print Format Menu . . . 45
4.3.7 Setup – Stream Format Menu . . . 46
4.4 Accumulator Menu . . . 46
4.5 Tare Menu . . . 47
4.6 Audit Menu . . . 47

5.0 Calibration . . . 48
5.1 Front Panel Calibration . . . 48
5.1.1 Span Calibration . . . 48
5.1.2 Linear Calibration . . . 49
5.2 Alternative Zero Calibrations . . . 49
5.2.1 Last Zero . . . 49
5.2.2 Temporary Zero . . . 49
5.2.3 Rezero . . . 49
5.3 EDP Command Calibration . . . 50

6.0 Revolution . . . 51
6.1 Connecting to the Indicator . . . 51
6.2 Saving and Transferring Data . . . 51
6.2.1 Saving Indicator Data to a Personal Computer . . . 51
6.2.2 Downloading Configuration Data from PC to Indicator . . . 51

7.0 EDP Commands . . . 52
7.1 Key Press Commands . . . 52
7.2 Reporting Commands . . . 53
7.3 Reset Configuration Command . . . 53
7.4 Parameter Setting Commands . . . 53
7.5 USB Setting Commands . . . 54
7.6 EDP Setting Commands . . . 55

RICE LAKE TECHNICAL TRAINING SEMINARS

Technical training seminars are available through Rice Lake Weighing Systems. Course descriptions and dates can be viewed at ***www.ricelake.com/training*** *or obtained by calling 715-234-9171 and asking for the training department.*

7.7 Stream Setting Commands . . . 55
7.8 Feature Commands . . . 55
7.9 Print Format Commands . . . 56
7.10 Weigh Mode Commands . . . 56

8.0 Print Formatting . . . 57

8.1 Print Formatting Tokens . . . 57
8.2 Customizing Print Formats . . . 58
8.3 Non-Human Readable Characters . . . 58

9.0 Maintenance . . . 59

9.1 Maintenance Checkpoints . . . 59
9.2 Field Wiring . . . 59
9.3 Troubleshooting . . . 59
9.4 Board Replacement . . . 60
9.5 Updating Firmware . . . 60
9.5.1 With Revolution . . . 60
9.5.2 Without Revolution . . . 60

10.0 Appendix . . . 61

10.1 Error Messages . . . 61
10.2 ZZ EDP Command . . . 61
10.3 Continuous Data (Stream) Output Formats . . . 62
10.3.1 Rice Lake Weighing Systems Stream Format (RLWS) . . . 62
10.3.2 Cardinal Stream Format (crdnal) . . . 62
10.3.3 Avery Weigh-Tronix Stream Format (wtrnix) . . . 63
10.3.4 Mettler Toledo Stream Format (toledo) . . . 63
10.4 Conversion Factors for Secondary Units . . . 64
10.5 Digital Filtering . . . 64
10.5.1 Digital Rolling Average Filter (AVGONLY) . . . 64
10.5.2 Regulatory Mode Functions . . . 65
10.6 ASCII Character Chart . . . 66
10.7 Front Panel Display Characters . . . 67

11.0 Compliance . . . 68

12.0 Specifications . . . 74

RICE LAKE WEBINARS

Rice Lake continually offers web-based video training on a growing selection of product-related topics at no cost. Visit ***www.ricelake.com/webinars***

1.0 Introduction

This manual is intended for use by service technicians responsible for installing and servicing 380/380X/381 digital weight indicators.

Configuration and calibration of the indicator can be accomplished using the Revolution® configuration utility or the indicator front panel keys. See Section 4.0 on page 38 and Section 5.0 on page 48 for information about configuration and calibration.

Manuals are available from Rice Lake Weighing Systems at **www.ricelake.com/manuals**

Warranty information is available at **www.ricelake.com/warranties**

1.1 Safety

Safety Definitions:

DANGER: Indicates an imminently hazardous situation that, if not avoided, will result in death or serious injury. Includes hazards that are exposed when guards are removed.

WARNING: Indicates a potentially hazardous situation that, if not avoided, could result in serious injury or death. Includes hazards that are exposed when guards are removed.

CAUTION: Indicates a potentially hazardous situation that, if not avoided, could result in minor or moderate injury.

IMPORTANT: Indicates information about procedures that, if not observed, could result in damage to equipment or corruption to and loss of data.

General Safety

Do not operate or work on this equipment unless this manual has been read and all instructions are understood. Failure to follow the instructions or heed the warnings could result in injury or death. Contact any Rice Lake Weighing Systems dealer for replacement manuals.

WARNING

Failure to heed could result in serious injury or death.

Some procedures described in this manual require work inside the indicator enclosure. These procedures are to be performed by qualified service personnel only.

Ensure the power source is disconnected from the outlet before opening the unit.

Do not allow minors (children) or inexperienced persons to operate this unit.

Do not operate without the enclosure completely assembled.

Do not use for purposes other than weight taking.

Do not place fingers into slots or possible pinch points.

Do not use this product if any of the components are cracked.

Do not exceed the rated specification of the unit.

Only connect unit to equipment certified to IEC 60950, IEC 62368, IEC 61010 or similar.

Do not make alterations or modifications to the unit.

Do not remove or obscure warning labels.

Do not use solvents or aggressive substances to clean the indicator.

Do not submerge.

© Rice Lake Weighing Systems ● All Rights Reserved

1.2 Options

The 380/380X/381 Synergy indicator includes several factory installed options. Some features in this manual are not available in all models.

Synergy Series Models

Stainless Steel Model

- 380 (PN 202711) — Universal alkaline C-cell battery powered (Adapter sold separately)
- 380X (PN 214337) — Universal washdown rechargeable lithium ion battery powered (AC internal power supply)

Plastic Models

- 381-AA (PN 215695) — Universal alkaline AA-cell battery powered (Adapter included)
- 381-NiMh (PN 215696) — Universal rechargeable nickel metal hydride battery powered (Charger included)

Available Options

- RTC Option (PN 204258) — Adds date and time functionality to the indicator; time is backed by an independent battery.

1.3 Operating Modes

Weigh Mode

Weigh mode is the default mode of the indicator. The indicator displays gross or net weights as required, using the annunciators to indicate scale status and the type of weight value displayed.

User Mode

User mode is accessible by pressing and holding ZERO for five seconds on the front panel while in weigh mode. The indicator displays the audit, accumulator, tare and version menus when in user mode.

Setup Mode

Setup mode is accessible by pressing ZERO momentarily on the front panel during the startup sequence. Only press ZERO once. Do not press and hold or double press ZERO. All menus in this section can be accessed from within Setup mode.Most of the procedures described in this manual, including calibration, require the indicator to be in setup mode.

See Section 4.0 on page 38 for the procedure to enter setup mode and the parameters available.

1.4 FCC Compliance

United States

This equipment has been tested and found to comply with the limits for a Class A digital device, pursuant to Part 15 of the FCC Rules. These limits are designed to provide reasonable protection against harmful interference when the equipment is operated in a commercial environment. This equipment generates, uses, and can radiate radio frequency energy and, if not installed and used in accordance with the instruction manual, may cause harmful interference to radio communications. Operation of this equipment in a residential area is likely to cause harmful interference in which case the user will be required to correct the interference at his own expense.

Canada

This digital apparatus does not exceed the Class A limits for radio noise emissions from digital apparatus set out in the Radio Interference Regulations of the Canadian Department of Communications.

Le présent appareil numérique n'émet pas de bruits radioélectriques dépassant les limites applicables aux appareils numériques de la Class A prescites dans le Règlement sur le brouillage radioélectrique edicté par le ministère des Communications du Canada.

1.5 Lithium-Ion Battery Safety

The following warnings apply to 380X (PN 214337) indicators with a lithium-ion battery.

Handling Instructions

Read and observe the following warnings and precautions to ensure lithium-ion batteries' correct and safe use.

DANGER: Failure to observe the following precautions will result in battery leakage, overheating, explosion and/ or fire..

- **Do not immerse the battery in water or allow it to get wet.**
- **Do not use or store the battery near heat sources such as a fire or heater.**
- **Do not connect the battery directly to wall outlets or car cigarette-lighter sockets.**
- **Do not put the battery on fire or apply direct heat.**
- **Do not short-circuit the battery by connecting wires or other metal objects to the positive(+) and negative(-)terminals.**
- **Do not carry or put the battery together with necklaces, hairpins or other metal objects.**
- **Do not strike, throw or subject the battery to severe physical shock.**
- **Do not pierce the battery casing with a nail or sharp object, break it open with a hammer, or step on it.**
- **Do not directly solder the battery terminals.**
- **Do not attempt to disassemble or modify the battery in any way.**
- **Do not recharge the battery near a fire or in extremely hot conditions.**

WARNING: Failure to observe the following precautions may result in battery leakage, overheating, explosion and/ or fire.

- **Do not place the battery in a microwave oven or pressurized container.**
- **Do not use the battery if it gives off an odor, generates heat, becomes discolored or deformed, or appears abnormal.**
- **If the battery leaks or emits an odor, immediately remove it from the proximity of any exposed flame. The leaking electrolyte can ignite and cause a fire or explosion.**
- **If the battery leaks and electrolyte gets in the eyes, do not rub them. Instead, rinse them with clean running water and immediately seek medical attention. If left as is, electrolytes can cause eye injury.**

CAUTION: Do not use or store the battery exposed to extremely hot, such as under window of a car in direct sunlight in a hot day. Otherwise, the battery may be overheated. Heat can also reduce battery performance and shorten service life.

Use the battery only under the following environmental conditions. Failure to do so can reduce performance or shorten service life. Recharging the battery outside of these temperatures can cause the battery to overheat, explode or catch fire.

Operating environment:

- **When charging the battery: 32° to 113° F (0° to 45° C)**
- **When discharging the battery: -4° to 140° F (-20° to 60° C)**
- **Battery may not function outside of temperature guidelines.**

If the battery leaks and the electrolyte contacts skin or clothing, rinse the affected area with clean running water. If left as is, skin inflammation can occur.

Delivery Condition

Partial charged condition. Battery voltage: 7.65~7.95V.

Battery Maintenance

The following guidelines will optimize battery life:

- Battery should maintain more than 85% of its charge after one year of storage
- If a device is unused for an extended period, the battery should be removed and stored in a cool, dry place. Otherwise, reduced performance may occur.
- If storing for longer than 1 month, it is recommended to keep battery charge between 30 and 50 percent.
- The battery should be charged and discharged once every six months to maintain optimal capacity during long-term storage.
- The battery should have an approximate cycle life of 500 to 1000 charges.

© Rice Lake Weighing Systems ● All Rights Reserved

1.6 Disposal

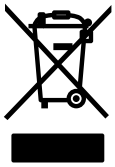

Product Disposal

The product must be brought to appropriate separate waste collection centers at the end of its life cycle.

Proper separate collection to recycle the product helps prevent possible negative effects on the environment and to health, and promotes the recycling of the materials. Users who dispose of the product illegally shall face administrative sanctions as provided by law.

Battery Disposal

Dispose of batteries at appropriate waste collection centers at the end of their life cycle in accordance with local laws and regulations. Batteries and rechargeable batteries may contain harmful substances that should not be disposed of in household waste. Batteries may contain harmful substances including but not limited to: cadmium (Cd), lithium (Li), mercury (Hg) or lead (Pb). Users who dispose of batteries illegally shall face administrative sanctions as provided by law.

WARNING: Risk of fire and explosion. Do not burn, crush, disassemble or short-circuit lithium batteries.

2.0 Installation

This section describes procedures for connecting power, load cells and data communication cables to a 380/380X/381 Synergy Series indicator. An assembly drawing and parts list are included for the service technician.

WARNING
AVERTISSEMENT

Risk of electrical shock.
Risque de choc.

Disconnect power before servicing.
Débranchez l'alimentation avant l'entretien.

CAUTION: Risk of explosion if battery is replaced by an incorrect type. Dispose of used batteries according to state and local regulations.

ATTENTION: Risque d'explosion si la batterie est remplacée par un type incorrect. Mattre au rebus les batteries usagées selon les règlements d'état et locaux.

Specified optional power adapters are the only external power sources allowed to be used for the 380/380X/381 Synergy Series indicators.

- ***380 — (PN 206433)***
- ***380X — Built in power supply. No optional external source.***
- ***381-AA — (PN 215734)***
- ***381-NiMh — (PN 185064) The 381-NiMh cannot be powered on with the adapter connected***

IMPORTANT: Leaving the charger attached to the 381-NiMh while not plugged in will discharge the battery even if the indicator is powered off.

The 381-NiMh loses its IP rating when the charger is attached.

WARNING: Failure to heed the following statements could result in serious injury or death.

- ***Procedures requiring work inside the product enclosure must be performed by qualified service personnel only.***
- ***Use a grounding wrist strap to protect components from electrostatic discharge (ESD) damage when working inside the product enclosure.***
- ***The power outlet must be near the equipment and must be easily accessible.***

2.1 Unpacking

Immediately after unpacking, visually inspect the 380/380X/381 to ensure all components are included and undamaged. The 380/380X shipping carton contains the indicator, this manual and a parts kit (Section 2.11 on page 24). The 381 shipping carton contains a power adapter, the stand and a quick start guide. If parts were damaged in shipment, notify Rice Lake Weighing Systems and the shipper immediately.

2.2 380/380X Product Dimensions

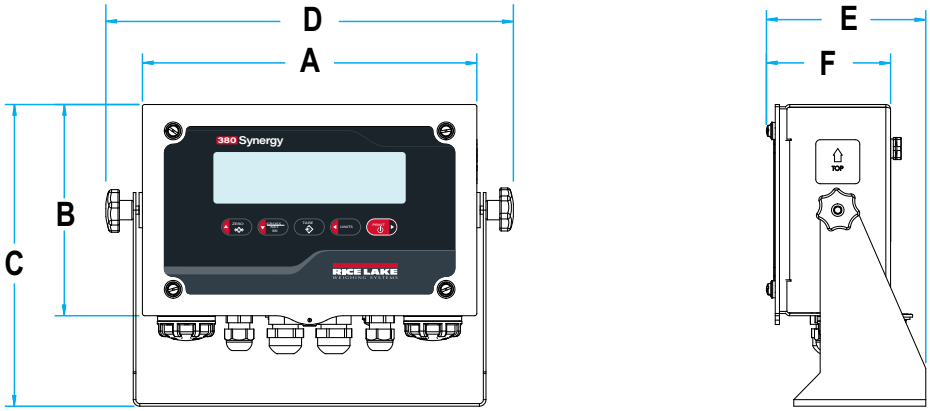

Figure 2-1. 380 Product Diagram

A	B	C	D	E	F
9.50 in (241 mm)	6.00 in (152 mm)	8.57 in (218 mm)	11.58 in (294 mm)	4.53 in (115 mm)	3.53 in (90 mm)

Table 2-1. 380/380X Product Dimensions

© Rice Lake Weighing Systems ● All Rights Reserved

2.3 381 Product Dimensions

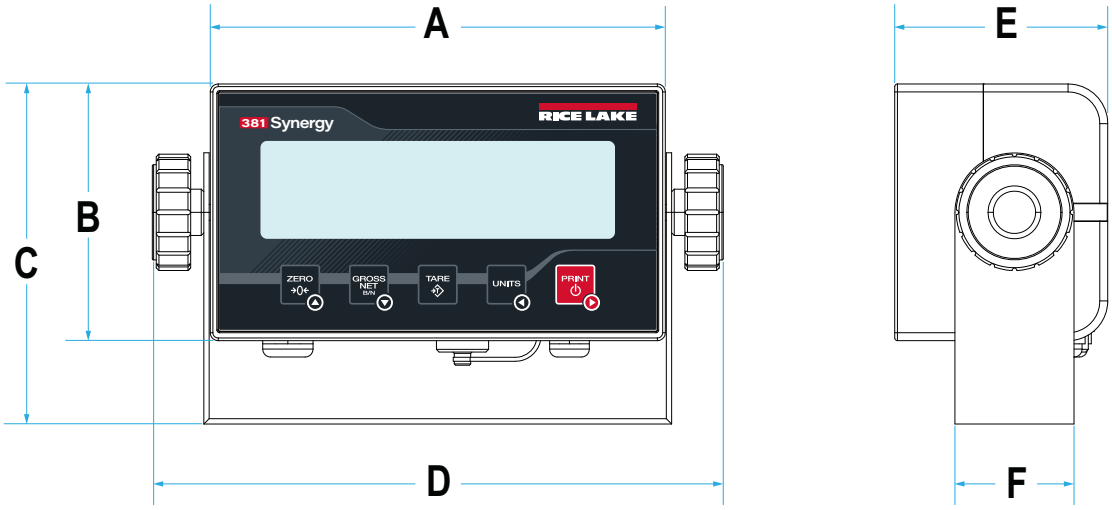

Figure 2-2. 381 Product Diagram

A	B	C	D	E	F
6.77 in (172 mm)	3.82 in (97 mm)	5.06 in (129 mm)	8.50 in (216 mm)	3.17 in (81 mm)	1.77 in (45 mm)

Table 2-2. 381 Product Dimensions

2.4 Mounting Instructions

All 380/380X/381 Synergy Series indicators include a universal mount stand. The 380/380X/381 universal mount stand has 4 holes. The stand can be mounted on a wall, tabletop or a flat surface. The instructions below are to be used as an example for all models. Holes in the 380/380X universal mount stand are configured differently than the 381. The 381 universal mount stand supports additional mounting options.

NOTE: The universal mount stand comes attached to the 380/380X. Rice Lake Weighing Systems recommends removing the indicator from the stand prior to mounting.

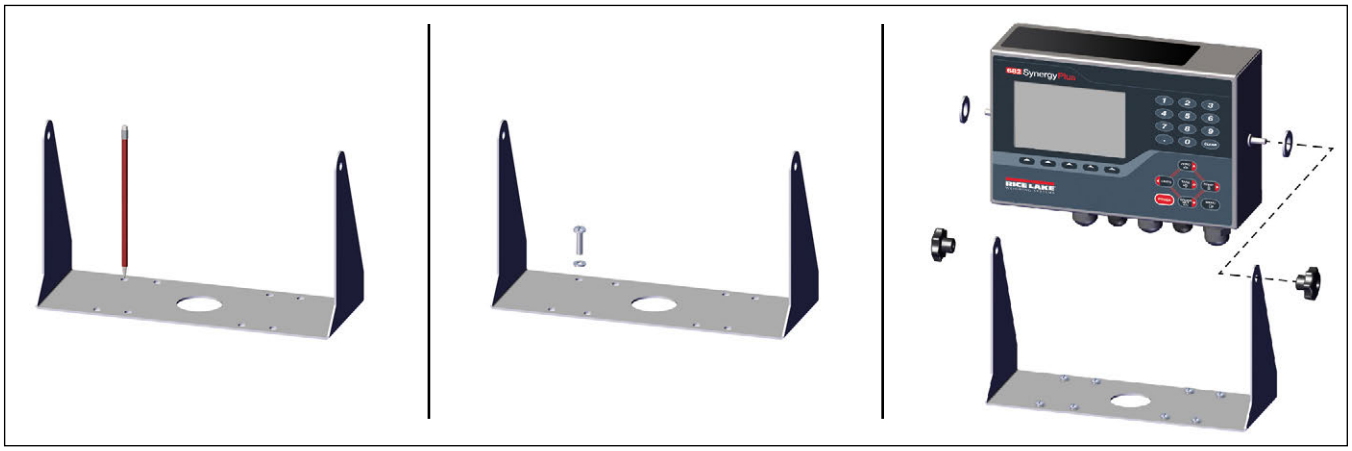

Figure 2-3. Mounting the Indicator

1. Using the mount as a template, mark the screw locations.
2. Drill holes for the screws.
3. Secure the universal mount using the appropriate length 1/4 in or M6 hardware (not included).
4. Reattach the 380/380X/381 to the universal mount stand.

NOTE: The 380/380X parts kit includes rubber grommets to insert into the four screw holes of the universal mount stand for a non-mounted application.

2.5 Open Enclosure

This section includes information on opening the 380/380X/381 enclosures.

2.5.1 380/380X Front Plate Removal

Remove the front plate of the 380/380X to connect cables and to gain access to the 380/380X board.

WARNING: Before opening the unit, ensure batteries are removed and the optional power cord is disconnected from the power outlet.

1. Place the indicator face-up on an anti-static work mat.
2. Unscrew the screws holding the front plate to the enclosure.

   NOTE: Screws are held in place with retaining washers and cannot be entirely removed.

3. Lift the front plate away from the enclosure and disconnect the ground wire from the front plate.

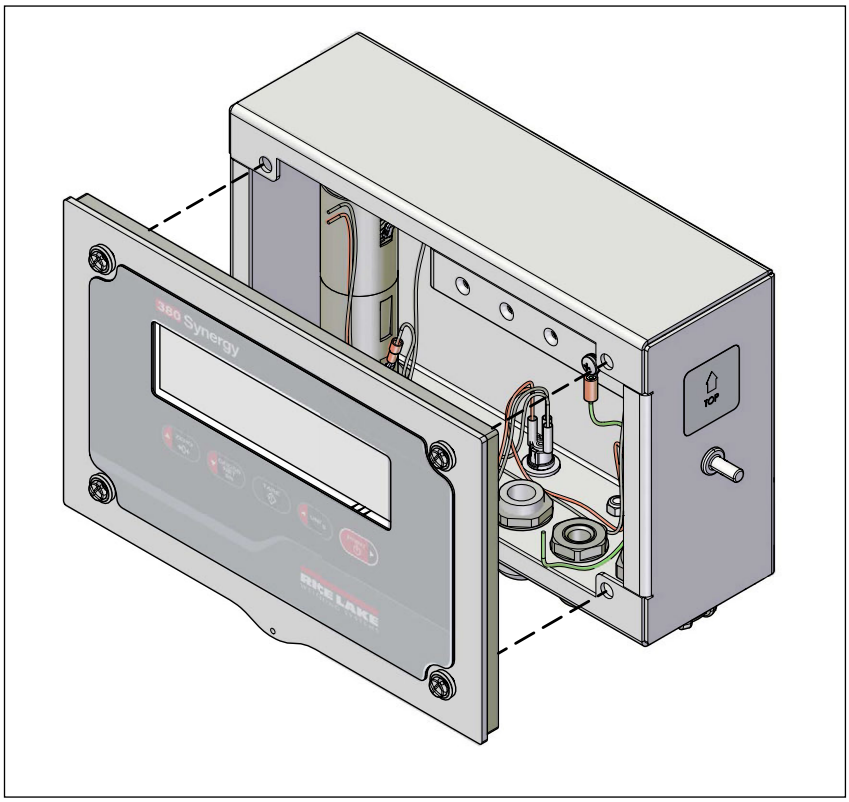

Figure 2-4. Removing the Front Plate

380/380X Torque Ratings

Refer to Table 2-3 throughout installation and use of product to maintain proper torque ratings for 380/380X components.

Component	Torque Rating
Front Plate Screw	10 in-lb (1.1 N-m)
Cord Grip Nut (to enclosure)	33 in-lb (3.7 N-m)
Cord Grip Dome Nut (around cable)	22 in-lb (2.5 N-m)
Grounding wire	10 in-lb (1.1 N-m)
Standoff Nuts	4 in-lb (0.45 N-m)

Table 2-3. Component Torque Ratings

© Rice Lake Weighing Systems ● All Rights Reserved

2.5.2 381 Back Cover Removal

Remove the back cover of the 381 to connect cables and to gain access to the 381 board.

WARNING: Before opening the unit, ensure power cord is disconnected from the power outlet.

1. Place the indicator face-down on an anti-static work mat.
2. Remove the screws holding the back cover to the enclosure with a 3mm hex key (PN 216647).
3. Lift the back cover away from the enclosure.

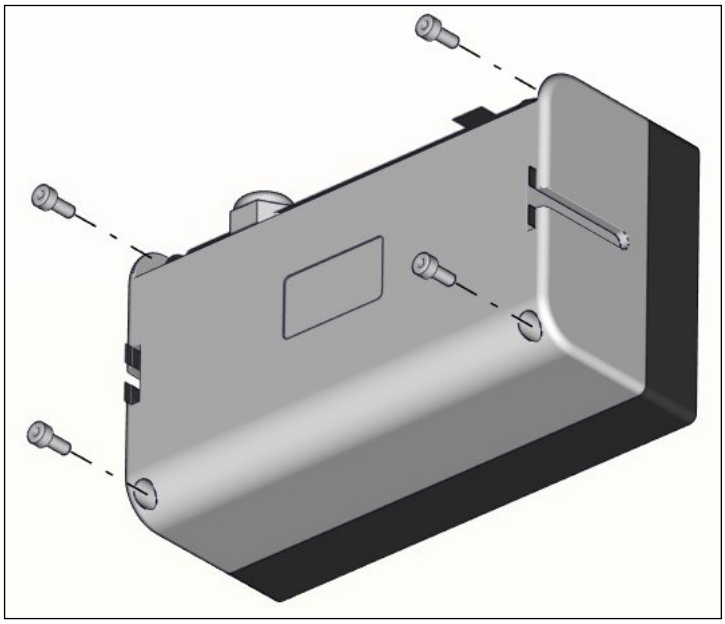

Figure 2-5. Removing the Back Cover

381 Torque Ratings

Refer to Table 2-4 throughout installation and use of product to maintain proper torque ratings for 381 components.

Component	Torque Rating
Back Cover Screw	13 in-lb (1.5 N-m)
Cord Grip Nut (to enclosure)	33 in-lb (3.7 N-m)
Cord Grip Dome Nut (around cable)	22 in-lb (2.5 N-m)
Standoff Nuts	4 in-lb (0.45 N-m)

Table 2-4. Component Torque Ratings

2.6 Cord Grip Connections

Each of the models in the 380/380X/381 Synergy Series indicator line utilizes a different cord grip configuration. Cable plugs for the 380/380X are included in the parts kit and must be installed in open cord grips to prevent moisture from entering the enclosure. Depending on the application, install cables as required. Cord grip plugs for the 381 are already installed. The recommended cable strip length is 0.25 in (7 mm) for all 380/380X/381 connectors.

WARNING: Only connect unit to equipment certified to IEC 60950, IEC 62368, IEC 61010 or similar.

IMPORTANT: Do not have open/bare wires outside of the enclosure. Make sure no stripped portion of cable is on the outside of the cord grips.

IMPORTANT: Properly seal cord grips to prevent moisture damage inside of the enclosure. Cable plugs must be installed in unused cord grips. Cord grip dome nuts, around a cable or a plug, must be torqued to 22 in-lb. The cord grip nut against the enclosure must be torqued to 33 in-lb.

Cable Diameter Ranges

Refer to Table 2-5 for minimum and maximum cable sizes for use with cord grips.

Cord Grip	Diameter Range
PG7 (PN 58983)	0.098 - 0.256 in (2.5 - 6.5mm)
PG9 (PN 15626)	0.138 - 0.315 in (3.5 - 8mm)
PG11 (PN 68600)	0.197 - 0.394 in (5 - 10 mm)

Table 2-5. Allowable Cable Diameter Ranges

2.6.1 380 Cord Grip Connections (PN 202711)

The 380 provides four cord grips at the bottom of the enclosure for cabling into the indicator. One of the cord grips is used for the load cell and the other three are used to accommodate the serial connection and other future connections. See Figure 2-6 for the recommended assignments for the 380 cord grips.

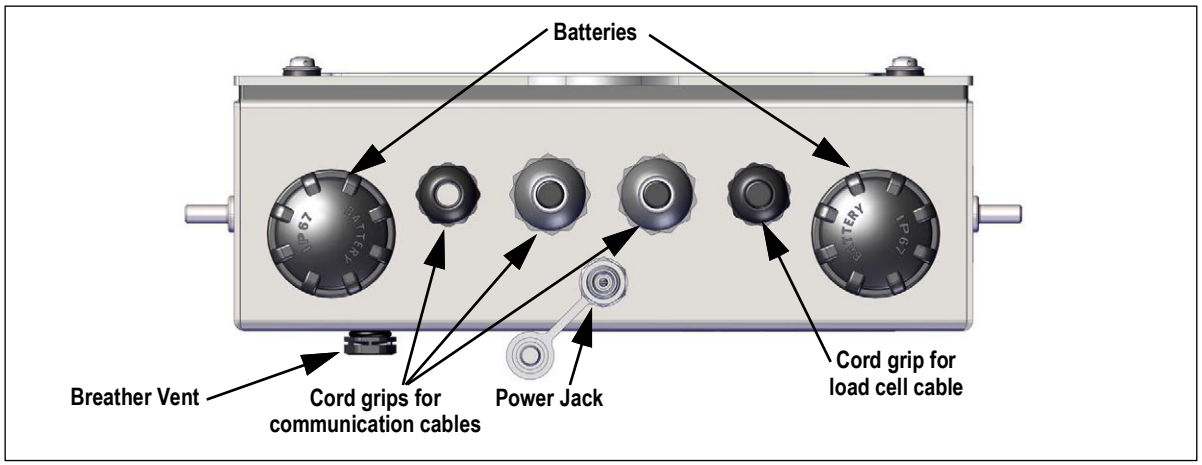

Figure 2-6. Recommended Cord Grip Assignments

© Rice Lake Weighing Systems ● All Rights Reserved

2.6.2 380X Cord Grip Connections (PN 214337)

The 380X provides four cord grips at the bottom of the enclosure for cabling into the indicator. See Figure 2-7 for the recommended assignments for the 380X cord grips.

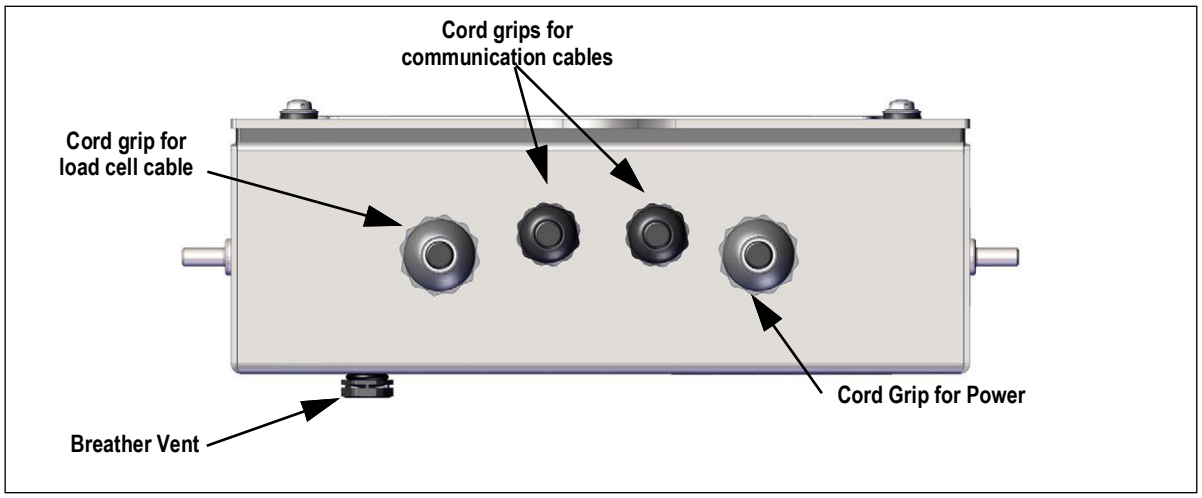

Figure 2-7. Recommended Cord Grip Assignments

2.6.3 381-AA Cord Grip Connections (PN 215695)

The 381-AA provides one cord grip, a power jack and an RJ-11 jack at the bottom of the enclosure for cabling into the indicator. The cord grip is used for the load cell and the other connections are for power and serial connection. See Figure 2-8 for the recommended assignments for the 381-AA connections.

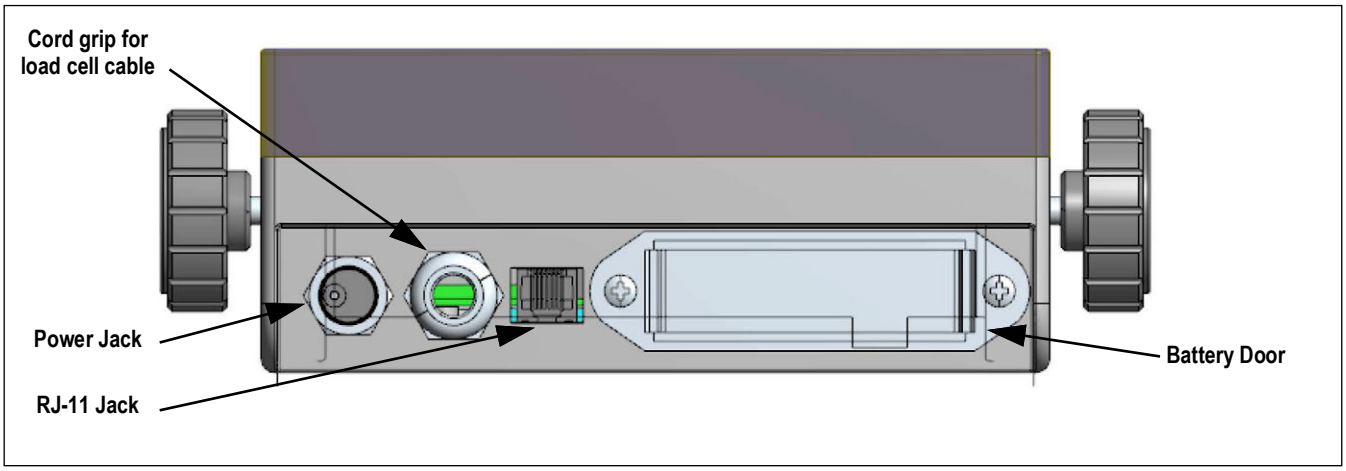

Figure 2-8. Recommended Connection Assignments

2.6.4 381-NiMH Cord Grip Connections (PN 215696)

The 381-NiMH provides two cord grips and two other connections at the bottom of the enclosure for cabling into the indicator. One of the cord grips is used for the load cell and the other three connections are used to accommodate the serial connection, the battery charger and other future connections. See Figure 2-9 for the recommended assignments for the 381-NiMH connections.

WARNING: Only connect unit to equipment certified to IEC 60950, IEC 62368, IEC 61010 or similar.

IMPORTANT: Removal of the RJ-11 cover and the charger cap invalidate the IP rating of the unit.

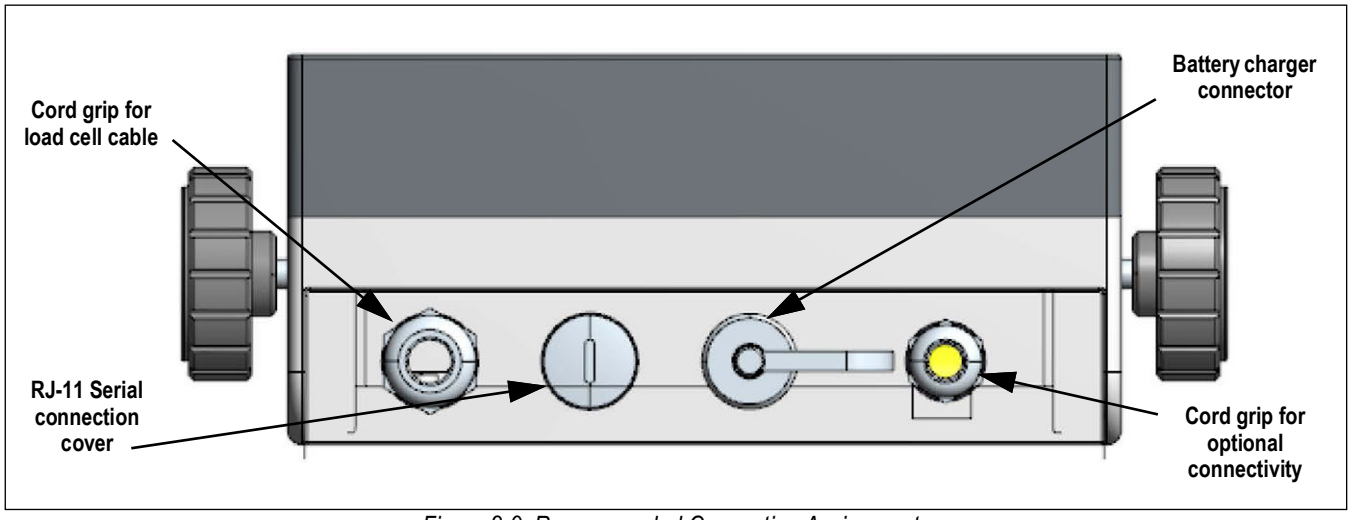

Figure 2-9. Recommended Connection Assignments

© Rice Lake Weighing Systems ● All Rights Reserved

2.7 380/380X Cable Shield Grounding

All cables routed through the cord grips on the 380/380X must be shield grounded against the grounding rail in the enclosure.

- Use M4 screws provided in the parts kit to install shielding clamps on the grounding rail at the back of the enclosure
- Install only the necessary amount of shielding clamps for the cord grips to be used
- Remove the insulated jackets and shielding per the following instructions

Shielding Procedure

1. Install the shielding clamps on the grounding rail using the clamp screws. Finger tighten the screws at this time.
2. Route the cables through the cord grips and the shielding clamps to determine the cable lengths required to reach the appropriate cable connectors.
3. Mark cables to remove the insulated jacket as described below for Foil Shielded Cables and Braid Shielded Cables.

Foil Shielded Cables

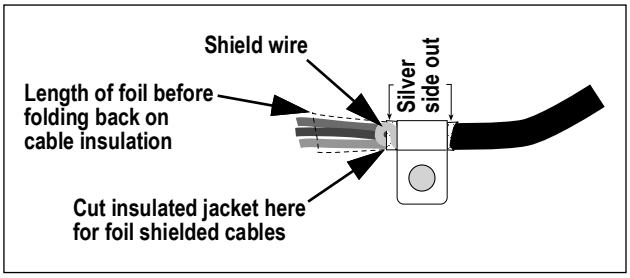

Figure 2-10. Foil Shielded Cable

1. Strip the insulated jacket and foil 1/2 in (15 mm) past the shielding clamp.
2. Strip another 1/2 in of the insulated jacket, leaving the foil shielding exposed.
3. Fold the foil shielding back on the cable where the cable passes through the clamp.
4. Ensure the silver (conductive) side of the foil is turned outward.
5. Wrap the shield wire around the cable, ensuring it contacts the foil where the cable passes through the clamp.
6. Torque the shielding clamp screw to 10 in-lb (1.1 N-m), ensuring the clamp is around the cable and contacting the shield wire.

Braid Shielded Cables

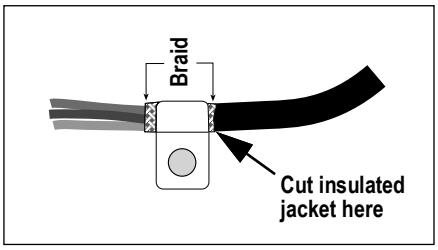

Figure 2-11. Braid Shielded Cable

1. Strip the insulated jacket and braided shielding from a point just past the shielding clamp.
2. Strip another 1/2 in (15 mm) of the insulated jacket, leaving the braid exposed where the cable passes through the clamp.
3. Torque the shielding clamp screw to 10 in-lb (1.1 N-m), ensuring the clamp is contacting the braided shielding of the cable.

NOTE: The recommended cable strip length is 0.25 in (7 mm) for all 380/380X/381 connectors.

2.8 CPU Board Connections

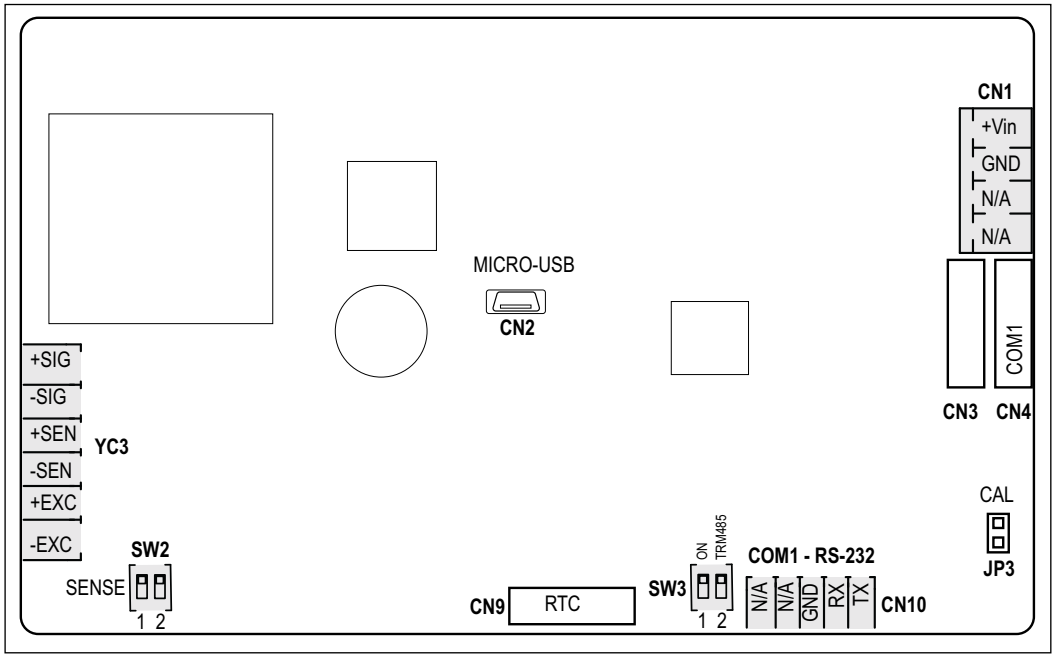

Figure 2-12. CPU Board Connections

NOTE: SW3 controls the following:
ON - Enables the CPU board to power on automatically when power is applied to the indicator.
485TRM - Adds termination resistance for RS-485 communication.

2.8.1 Load Cell Cable

To attach the cable from a load cell or junction box, route cable to the YC3 connector. See Table 2-6 for wiring the load cell cable from the load cell or junction box to connector.

Connector	Pin	Function
YC3	1	+SIG
	2	–SIG
	3	+SEN
	4	–SEN
	5	+EXC
	6	–EXC

Table 2-6. YC3 Pin Assignments (Load Cell)

NOTE: For a 4-wire installation leave pins 3 and 4 empty on the connector.
For a 6-wire installation set SW2 to all positions "off", for 4-wire installation set all positions to "on."

© Rice Lake Weighing Systems ● All Rights Reserved

2.8.2 380/380X RS-232 Serial Communications

The CN10 connector is intended to provide a connection point for the RS-232 serial communications. One RS-232 port is available. See Table 2-7 for the pin assignments for the CN10 connector.

Connector	Pin	RS-232
CN10	1	TX1
	2	RX1
	3	GND
	4	N/A
	5	N/A

Table 2-7. CN10 Pin Assignments (RS-232)

NOTE: This connection is available on the outside of the 381 enclosure via an RJ-11 connector and optional cable (PN 215273). The serial connection can be made directly to the CN10 connector if the RJ-11 connection is not wanted.

2.9 Power Connections

Power is connected to the power supply and the CPU board through the power harness.

Connector	Pin	Wire	Power
CN1	1	Red	+Vin
	2	Black	GND
	3	N/A	N/A
	4	N/A	N/A

Table 2-8. CN1 Power Pin Assignments (Power Supply)

2.9.1 380 Power Connections

The 380 Synergy Indicator is powered by 4 C-Cell Batteries or an optional 12 V adapter (PN 206433). When the adapter is inserted into the power jack, indicator power is disconnected from the battery holders and batteries no longer drain. The Power adapter does not charge the batteries.

NOTE: Optional power adapter (PN 206433) is the only external power source allowed to be used.
Ensure that battery covers are screwed finger tight. If covers are not fully secured, the indicator will not function.

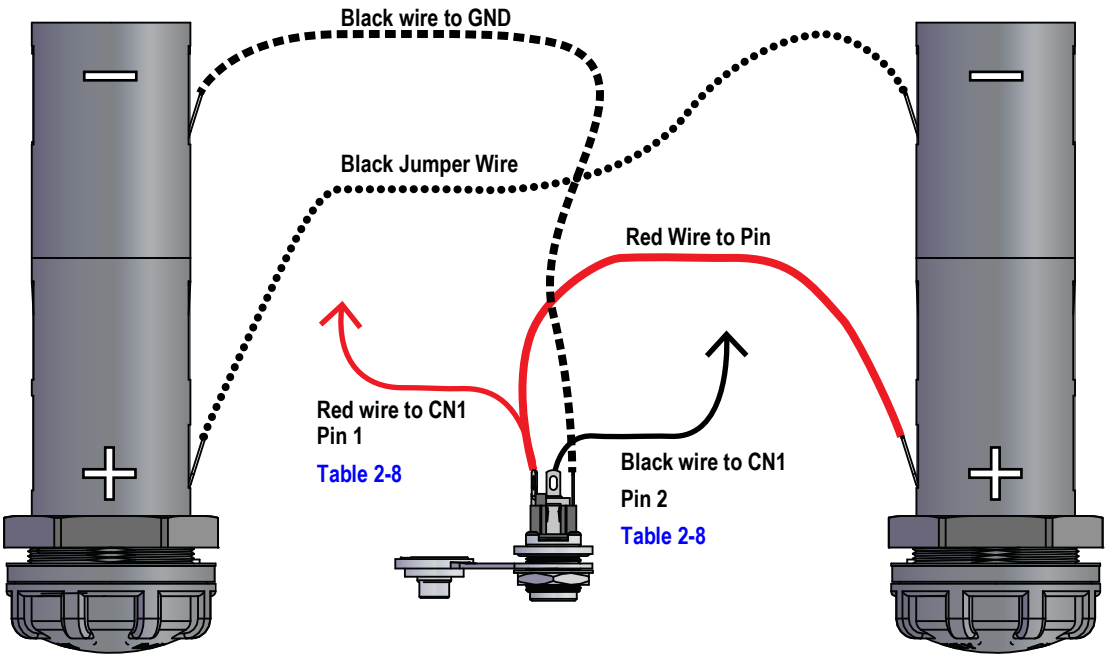

Figure 2-13. 380 Battery Cell Wiring

2.9.2 380X Power Connections

The 380X Synergy Indicator is powered by a rechargeable lithium-ion battery and a built in power supply. Power to the CPU board is routed through the charger board.

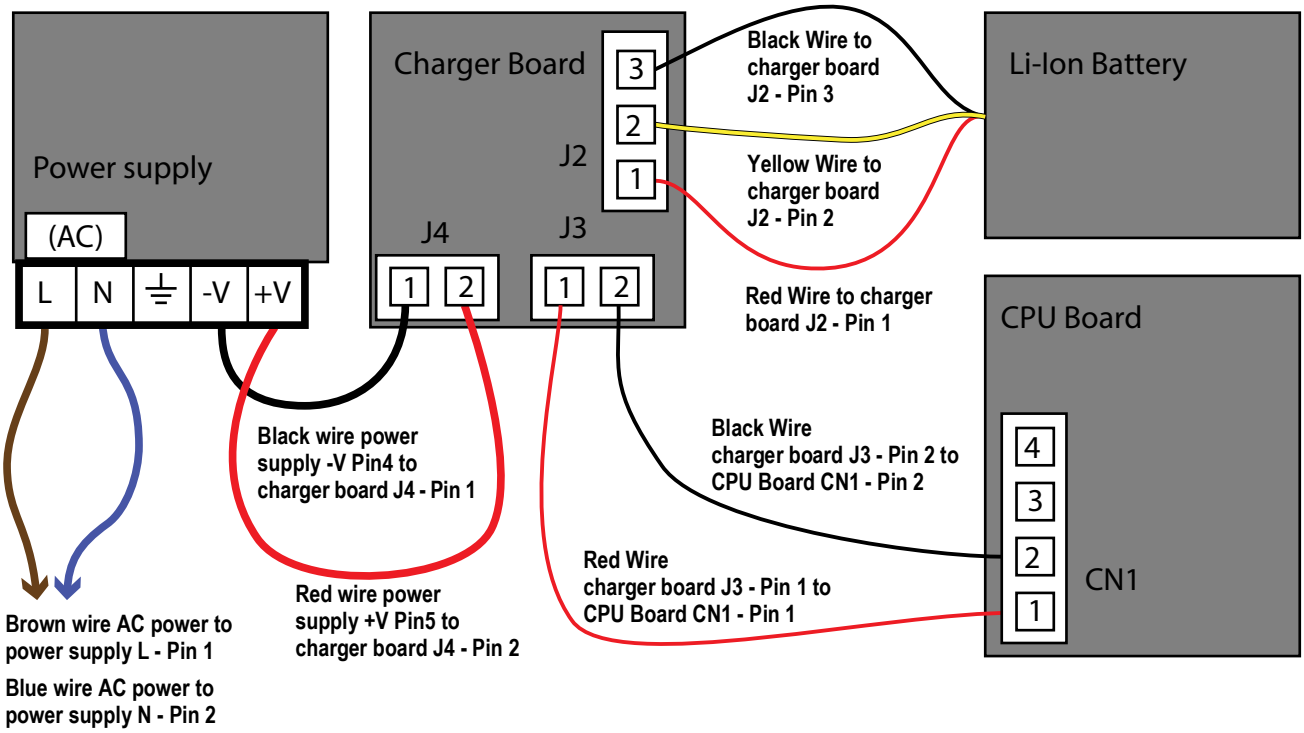

Figure 2-14. Battery Cell Wiring

Power Cable

AC versions of the 380X are shipped with the AC power cable already installed.

Figure 2-15. AC Power Cable

NOTE: The AC power cable is grounded to the threaded grounding hole on the back panel of the enclosure between the cord grip and the power supply connections rather than using Pin 3. This is a UL requirement.

Pin	Description	Wire Color	Cable Part No.
1	120 VAC (Line In)	Brown or Black	180842
2	AC Neutral	Blue or White	
3	Ground	N/C or Green/Yellow	–
4	DC Out (-V)	Black	199514
5	DC Out (+V)	Red	

Table 2-9. AC Power Supply Pin Assignments

NOTE: Colors may vary depending on manufacturer of AC power cable. Utilize testing procedures to ensure proper installation.

© Rice Lake Weighing Systems ● All Rights Reserved

2.9.3 381-AA Power Connections

The 381-AA Synergy Indicator is powered by 4 AA Batteries or a 12 V adapter (PN 215734). When the adapter is inserted into the power jack, indicator power is disconnected from the battery holders and batteries no longer drain. The power adapter does not charge the batteries.

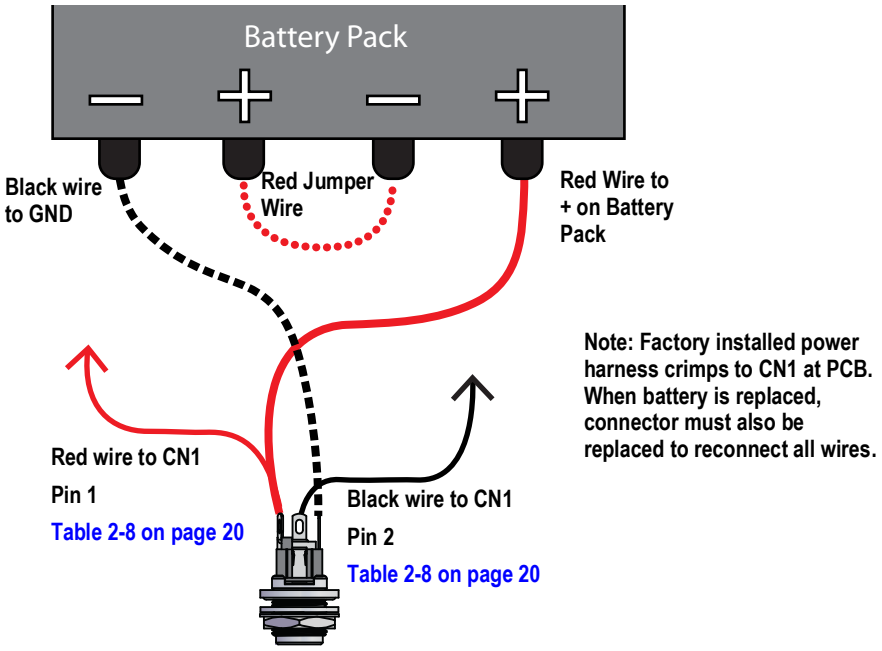

Figure 2-16. 381-AA Battery Cell Wiring

2.9.4 381-NiMH Power Connections

The 381-NiMH Synergy Indicator is powered by a rechargable NiMH battery. The Power adapter (PN 185064) charges the battery.

IMPORTANT: The 381-NiMH must not be powered on while battery is charging.
Leaving the charger attached to the 381-NiMh while not plugged in will discharge the battery even if the indicator is powered off.

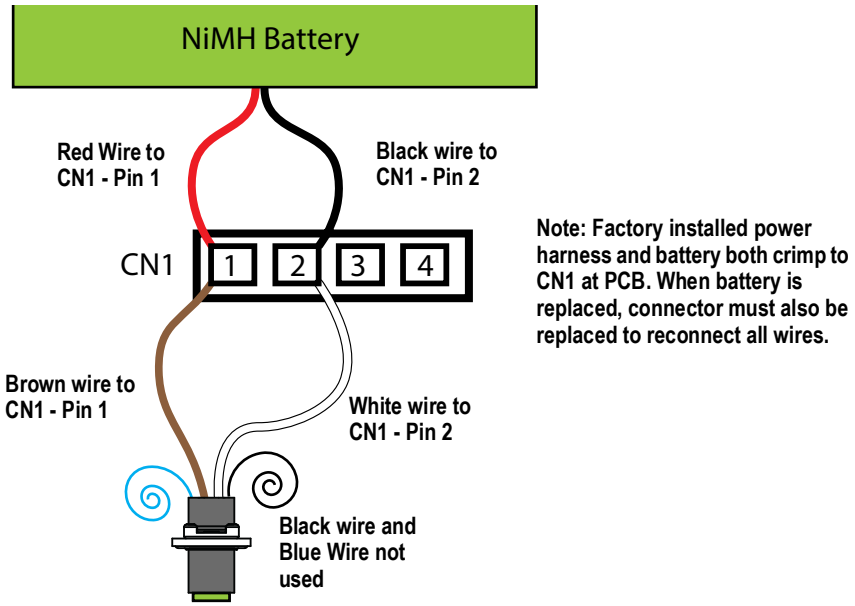

Figure 2-17. 381-NiMH Battery Cell Wiring

2.10 Reassembly

Once work inside of the enclosure is complete, reattach the front plate ground wire to the front plate.

2.10.1 380/380X Front Plate Reattachment

Position the front plate over the enclosure and install the four front plate screws with a Philips head screw driver. Use the torque pattern in Figure 2-18 to prevent distorting the front plate gasket. Torque screws to 10 in-lb (1.1 N-m).

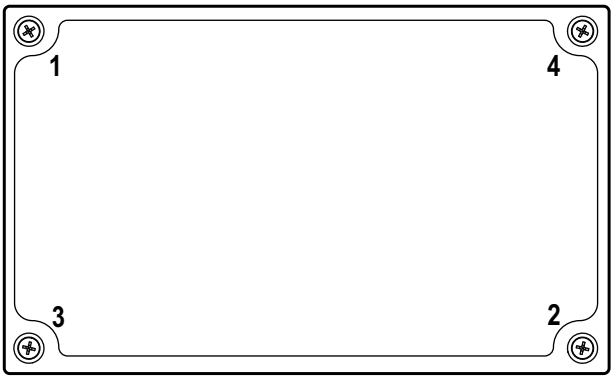

Figure 2-18. 380/380X Front Plate Torque Pattern

NOTE: Torqued screws may become less tight as the gasket is compressed during the torque pattern; a second torque is required using the same pattern and torque value.

2.10.2 381 Reassembly

Position the Back cover over the enclosure and install the four screws with a 3mm hex key (PN 216647). Use the torque pattern in Figure 2-19 to prevent distorting the gasket on the 381-NiMH. Torque screws to 13 in-lb (1.5 N-m).

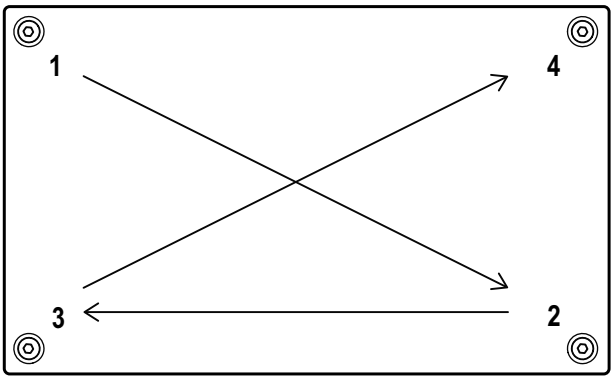

Figure 2-19. 381 Torque Pattern

NOTE: Torqued screws may become less tight as the gasket is compressed during the torque pattern; a second torque is required using the same pattern and torque value.

© Rice Lake Weighing Systems ● All Rights Reserved

2.11 380/380X Parts Kit Components

Part No.	Description	Qty.
108945	SCREW, M3 x 0.5 x 8 mm Phillips Flat Countersunk Stainless Steel Machine Screw	1
15631	CABLE TIE, 3 in Nylon	4
15650	MOUNT, 3/4 in Cable Tie Mount	2
15664	GLAND, Reducing 9 mm-3/8NPT	2
192586	FRAME, Jumper Protection	1
19538	POST PLUG, 1/4 in x 1.00 Slotted Black Plastic	3
202140	SCREW, M4 x 0.7 x 10 Phillips Pan Head Zinc Finish Steel SEMS Screw with External Tooth Washer	3
28325	BAG, 2 x 3 2-Mil Write On, Ziploc Style Plastic Bag	1
30632	BAG, 5 x 8 2-Mil Ziploc Style Plastic Bag	1
42149	BUMPER, 0.50 OD x 0.281 ID Rubber Grommet	4
53075	CLAMP, Ø 0.078 in Ground Cable Shield	4
67550	CLAMP, Ø 0.125 in Ground Cable Shield	2
94422	LABEL, 0.40 x 5.00 Capacity Label	1

Table 2-10. 380/380X Parts Kit (PN 205840) Components

2.12 Replacement Parts

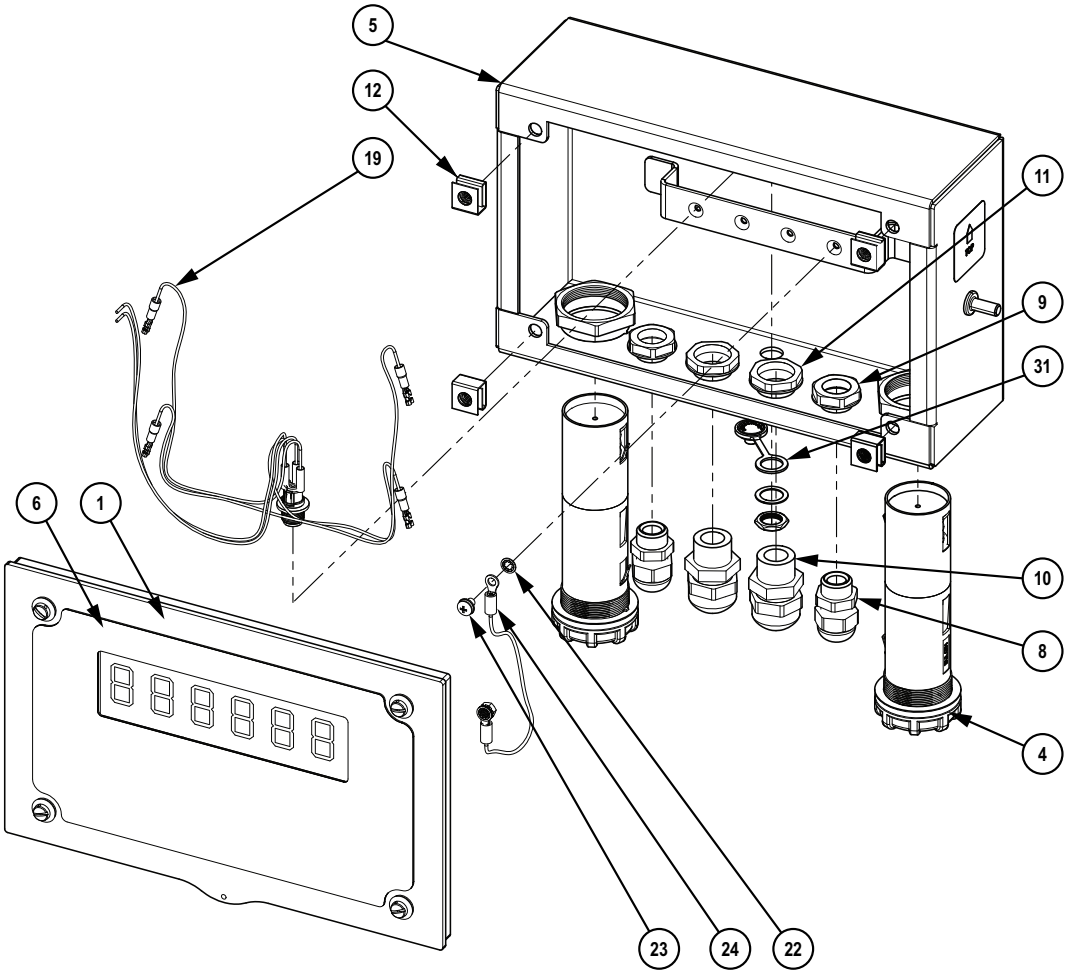

Figure 2-20. 380 Replacement Parts Diagram, Front View

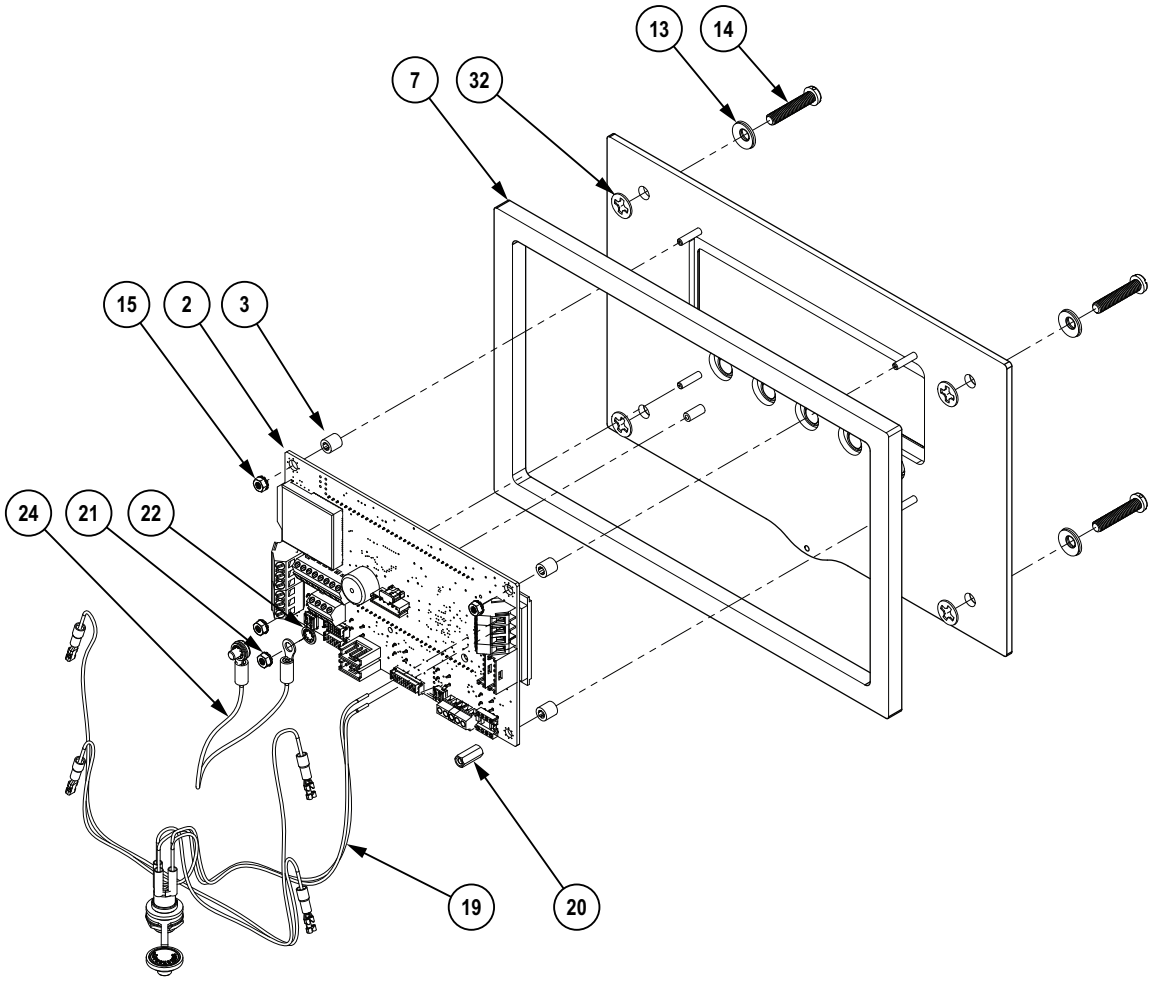

Figure 2-21. 380 Replacement Parts Diagram, Rear View

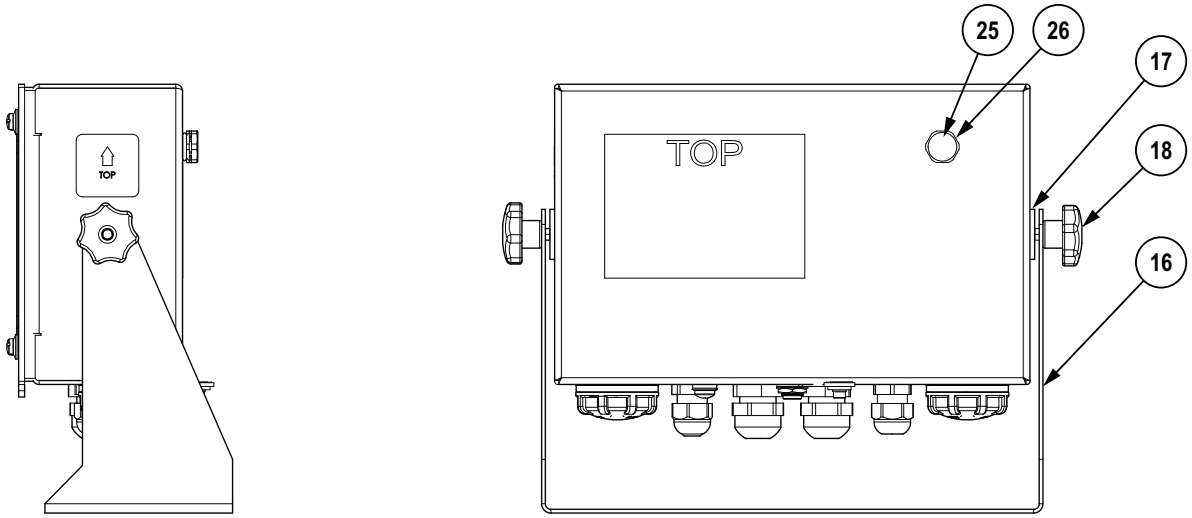

Figure 2-22. 380 Replacement Parts Diagram, Side View

© Rice Lake Weighing Systems ● All Rights Reserved

Item No.	Part No.	Description	Qty.
1	201041	FRONT COVER, 380 Universal Battery Powered	1
2	206406	BOARD ASSEMBLY, Replacement 380 CPU, RoHS Compliant	1
3	202064	SPACER, M3 x Ø0.250 x 0.260 Round Nylon	4
4	205136	HOLDER, BATTERY 2C, C-Size Battery Holder, Front Panel, IP67	2
5	201040	ENCLOSURE, 380 Universal Battery Powered	1
6	202824	OVERLAY, 380 Synergy Indicator	1
7	203691	GASKET, 380 Synergy Battery Powered Indicator	1
8	15626	CORD GRIP, PG9 Plastic	2
9	15627	LOCKNUT, PG9 Plastic	2
10	68600	CORD GRIP, PG11	2
11	68601	NUT, PG11 Black Nylon	2
12	205800	NUT, M5 x 0.8 Clip on Floating Hex Zinc Plated	4
13	46381	WASHER, #10 18-8 Bonded Sealing Stainless Steel	4
14	205687	SCREW, M5 x 0.8 x 25 mm Phillips Drilled Cheese Head Stainless Steel Machine Screw	4
15	202061	NUT, M3 x 0.5 Hex Kep Stainless Steel	3
16	29635	STAND, Stainless Steel Tilt	1
17	103988	WASHER, 0.515-0.52 Nylon	2
18	180825	KNOB, 32 mm Diameter, Nylon Knob, M6 x 1 Threaded Thru, Stainless Stee	2
19	204557	CABLE ASSEMBLY, 380 Synergy Power Harness	1
20	205753	STANDOFF, M3 x 0.5 x 12 mm F/F Nickel Plated Brass	1
21	180826	NUT, M4 x 0.7 Kep Nut with 18-8 Stainless Steel External Tooth Lock Washer	1
22	180856	WASHER, M4 Internal Tooth Stainless Steel	2
23	194488	SCREW, M4 x 0.7 x 6 Phillips Pan Head Zinc Finish Steel External Tooth Washer Sems Machine Screw	1
24	40672	WIRE, 9 in Ground Wire with #8 Eye Connector	1
25	88733	VENT, Black Plastic Gortex Sealed Breather	1
26	88734	NUT, M12 x 1 Thread Breather Vent	1
31	205294	SEAL, Power Jack Seal Cap	1
32	205884	WASHER, M5 x 0.177 ID x 0.453 OD x 0.032 Nylon Self-Retaining	4

Table 2-11. 380 Replacement Parts

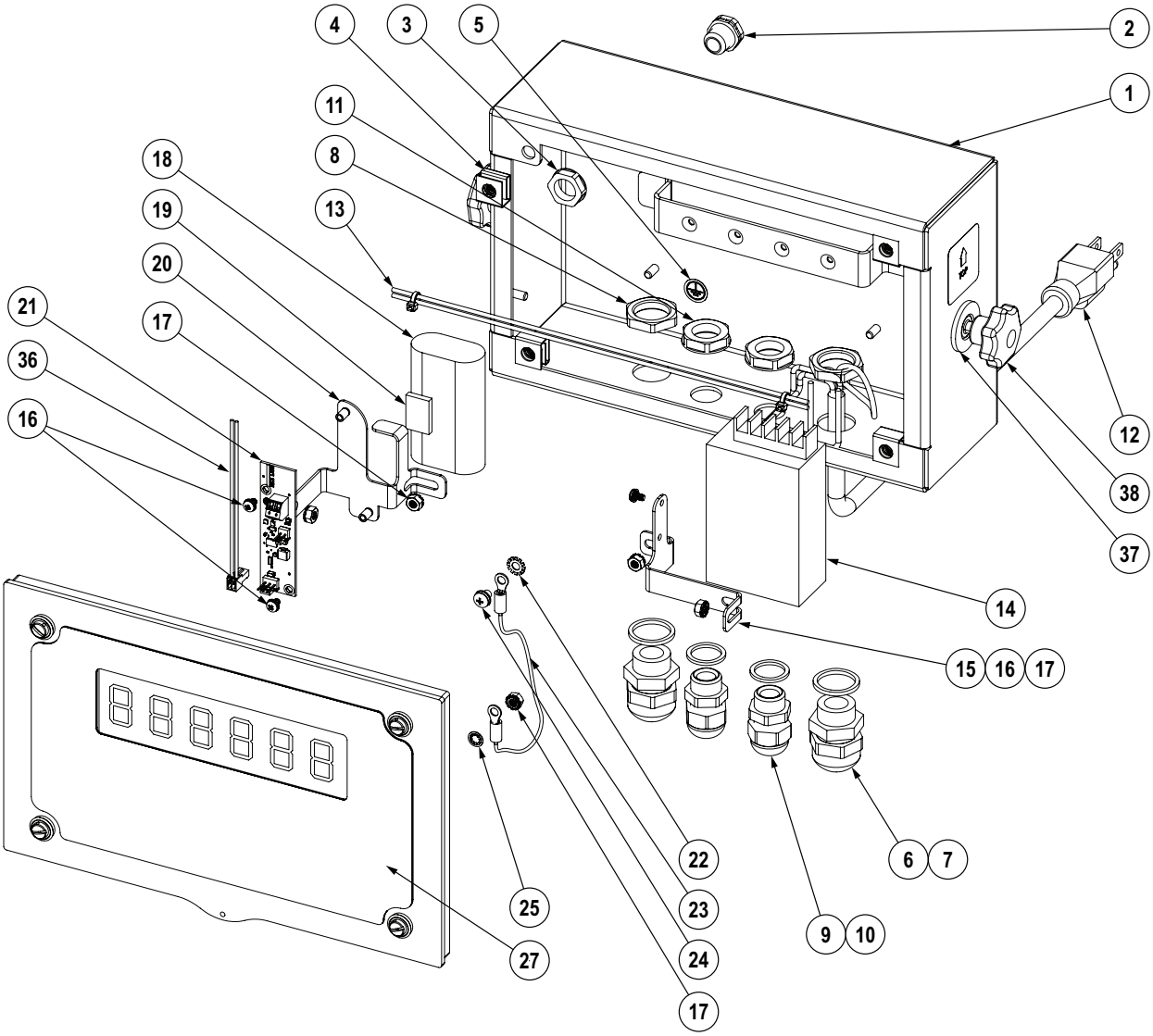

Figure 2-23. 380X Replacement Parts Diagram, Front View

© Rice Lake Weighing Systems ● All Rights Reserved

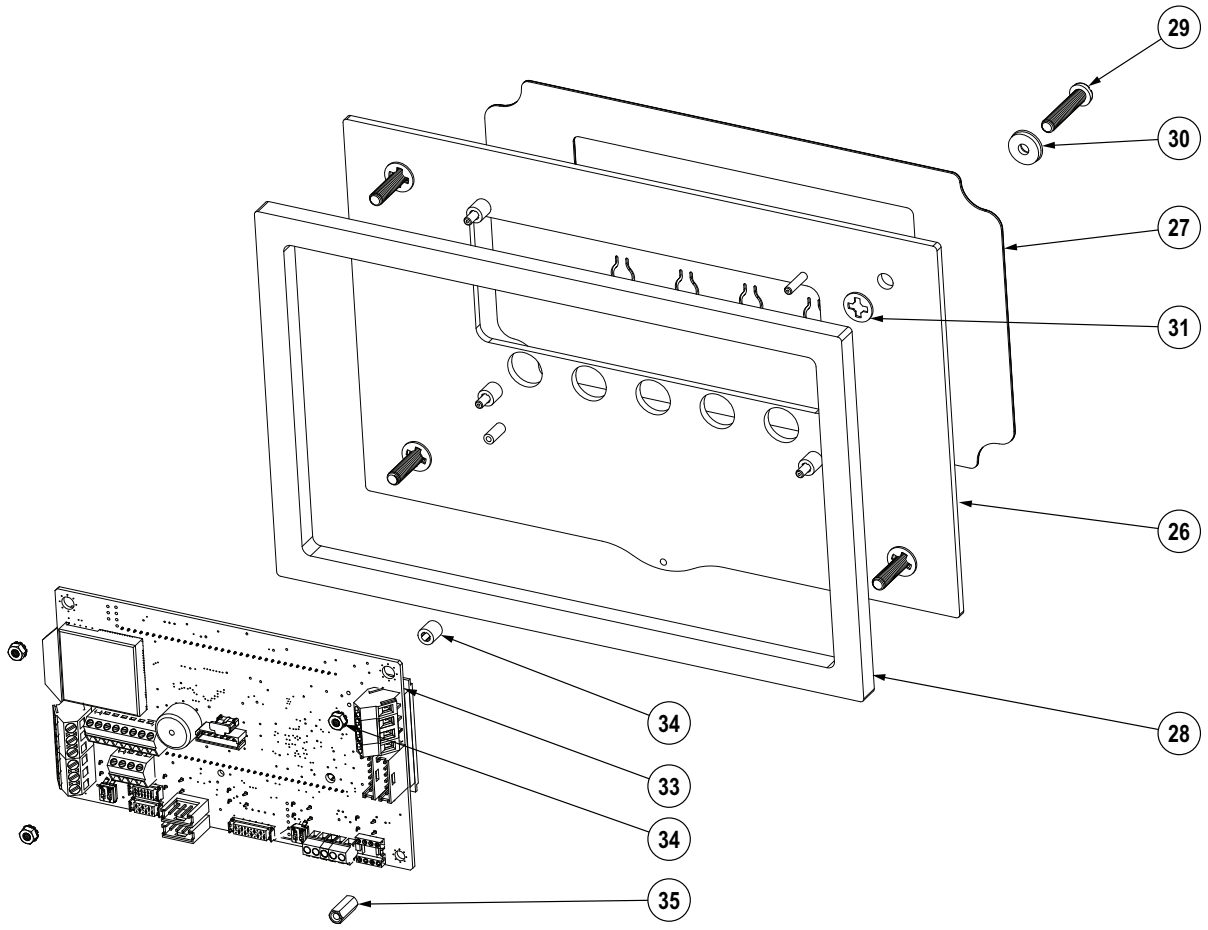

Figure 2-24. 380X Replacement Parts Diagram, Inside Back View

Item No.	Part No.	Description	Qty.
1	214653	ENCLOSURE, 380X Universal	1
2	88733	VENT, Black Plastic Gortex Sealed Breather	1
3	88734	NUT, M12 x 1 Thread Breather Vent	1
4	205800	NUT, M5 x 0.8 Clip on Floating Hex Zinc Plated	4
5	16892	LABEL, Ground Protective Earth Adhesive IEC 60417-5019	1
6	68600	CORD GRIP, PG11	2
7	68599	SEAL RING, Nylon PG-11	2
8	68601	NUT, PG11 Black Nylon	2
9	15626	CORD GRIP, PG9 Plastic	2
10	30375	SEAL RING, Nylon PG9	2
11	15627	LOCKNUT, PG9 Plastic	2
12	180842	POWER CORD ASSY, NEMA 5-15 UL Certified	1
13	215762	CABLE ASSY, Power Supply 380X to Charge Board	1
14	92463	POWER SUPPLY, 12 V, 25 W	1
15	214665	BRACKET, Power Supply 380X	1
16	180824	MACH SCREW,M3X0.5X5MM Phillips Pan head SEMS 18-8	3
17	180826	NUT, M4 x 0.7 Kep Nut with 18-8 Stainless Steel External Tooth Lock Washer	5
18	215873	BATTERY, Lithium Ion 7.2V 2000MAH	1
19	57822	GASKET, 12 in	1/2 in
20	214666	BRACKET, Battery 380X	1
21	203486	BRD ASSY, LIION CHRGR,SNGL Battery Power Connectivity Board, Single Li-Ion	1
22	15133	WASHER, Lock No 8 Type A	1
23	40672	WIRE, 9 in Ground Wire with #8 Eye Connector	1
24	194488	SCREW, M4 x 0.7 x 6 Phillips Pan Head Zinc Finish Steel External Tooth Washer Sems Machine Screw	1
25	180856	WASHER, M4 Internal Tooth Stainless Steel	1
26	201041	FRONT COVER, 380 Universal Battery Powered	1
27	214339	OVERLAY, 380X	1
28	203691	GASKET, 380 Synergy Battery Powered Indicator	1
29	205687	SCREW, M5 x 0.8 x 25 mm Phillips Drilled Cheese Head Stainless Steel Machine Screw	4
30	46381	WASHER, #10 18-8 Bonded Sealing Stainless Steel	4
31	205884	WASHER, M5 x 0.177 ID x 0.453 OD x 0.032 Nylon Self-Retaining	4
32	202064	SPACER, M3 x Ø0.250 x 0.260 Round Nylon	4
33	206406	BOARD ASSEMBLY, Replacement 380 CPU, RoHS Compliant	1
34	202061	NUT, M3 x 0.5 Hex Kep Stainless Steel	3
35	205753	STANDOFF, M3 x 0.5 x 12 mm F/F Nickel Plated Brass	1
36	215763	CABLE ASSY, Power Supply 380X Charge Board to Main Board	1
37	103988	WASHER, 0.515-0.52 Nylon	2
38	180825	KNOB, 32 mm Diameter, Nylon Knob, M6 x 1 Threaded Thru, Stainless Steel	2
	29635	STAND, Stainless Steel Tilt (not shown)	1

Table 2-12. 380X Replacement Parts

© Rice Lake Weighing Systems ● All Rights Reserved

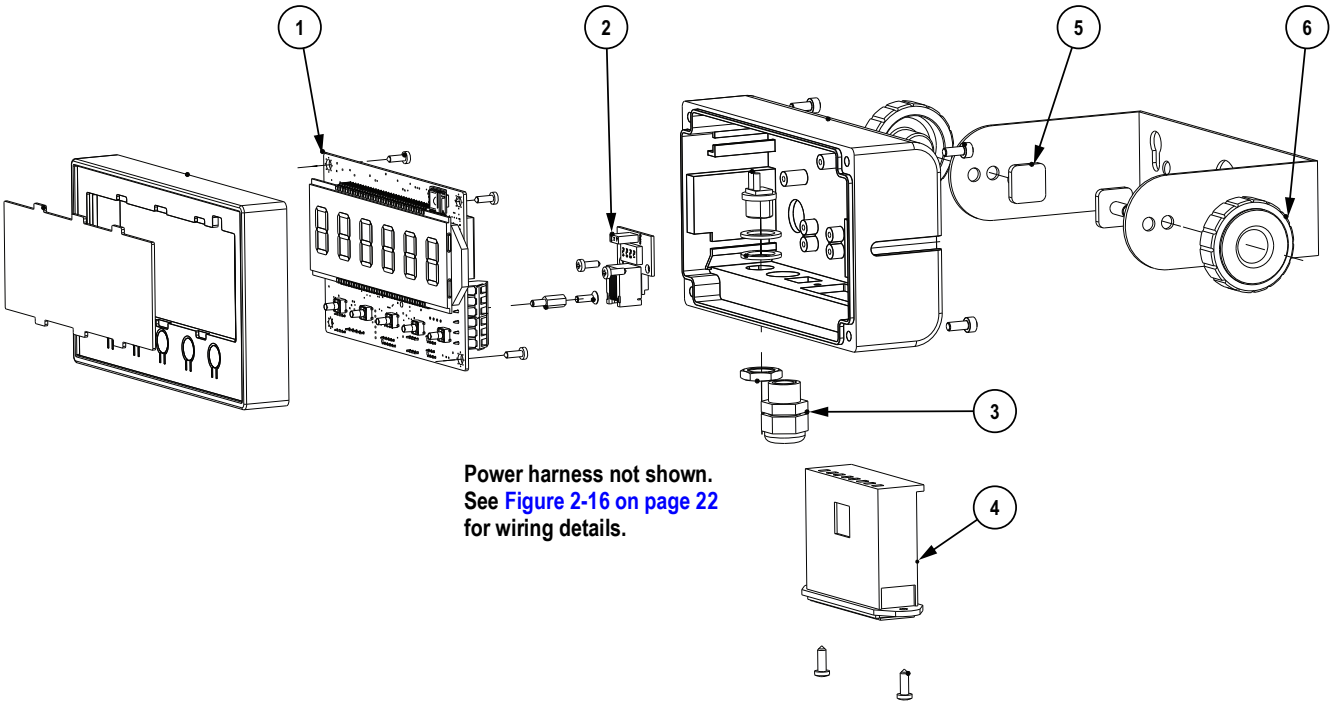

Figure 2-25. 381-AA Replacement Parts Diagram

Item No.	Part No.	Description
1	206406	CPU board
2	216782	BOARD ASSY, Serial RJ-11 381 Synergy
3	15626	PG-9 Cord Grip
4	216780	TRAY, Removable, Batt Holder 381 Synergy AA
5	216784	INSERT, Side Knob 381 Synergy (metal insert)
6	216783	KNOB, Side 381 Synergy {black cap)
7	216779	CABLE ASSY, Power Harness 381 Synergy AA

Table 2-13. 381-AA Replacement Parts

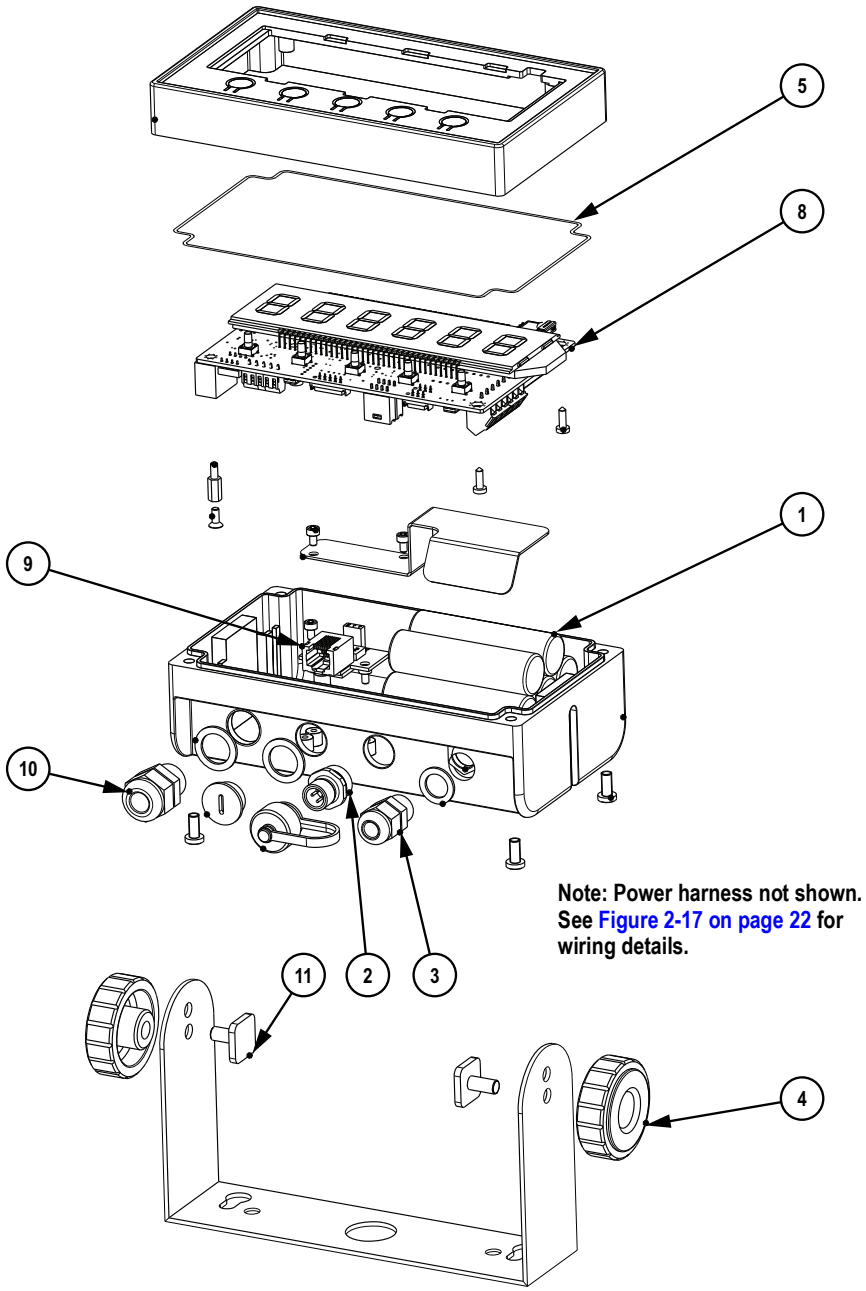

Figure 2-26. 381-NiMH Replacement Parts Diagram

Item No.	Part No.	Description
1	216781	BATTERY, NiMH, Internal 6 V 4.5 Ah, 381 Synergy
2	216778	CABLE ASSY, Power Harness 381 Synergy NiMH
3	58983	CORD GRIP, PG-7
4	216783	KNOB, Side 381 Synergy (black cap)
5	216814	GASKET, Seal 381 Enclosure IP68
8	206406	CPU board
9	216782	BOARD ASSY, Serial RJ-11 381 Synergy
10	15626	CORD GRIP, PG-9
11	216784	INSERT, Side Knob 381 Synergy (metal insert)

Table 2-14. NiMH Replacement Parts

© Rice Lake Weighing Systems ● All Rights Reserved

3.0 Operation

The front panel consists of a seven-segment LCD display with six 1.0 in (25 mm) tall digits. A negative number displays as five digits plus the negative symbol. The front panel also includes five flat panel keys, backed by tactile primary scale function buttons with an integrated power button. There are annunciators built into the LCD screen that show units and scale functions.

3.1 Front Panel

380/380X Synergy Front Panel

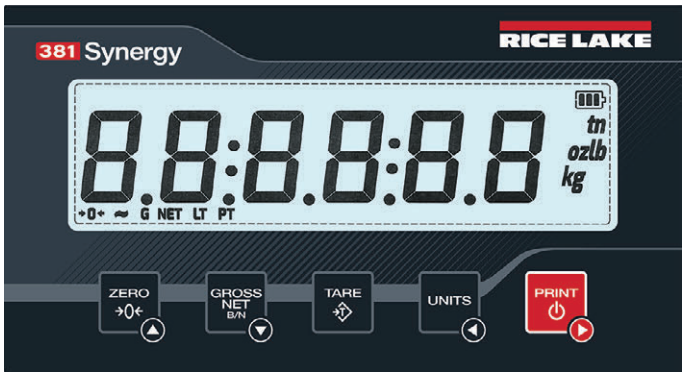

381 Synergy Front Panel

Figure 3-1. 380/380X/381 Synergy Series Front Panels

NOTE: All procedures in this manual use the 380 keys to illustrate functions. When operating a 381 Synergy product, use the corresponding buttons below.

380/380X Key	381 Key	Menu Navigation	Numeric Entry	Weigh Mode Function
ZERO	ZERO	Move **UP** menu structure	Increase digit value by 1	Sets the current gross weight to zero, provided the amount of weight to be removed or added is within the specified zero range and the scale is not in motion; the zero band is defaulted to 1.9% of full scale, but can be configured for up to 100% of full scale; hold five seconds to enter user mode when unit is already powered on **IMPORTANT: Do not hold during power up. Indicator enters update firmware mode if power is held during power up (Section 9.5.2 on page 60)**
GROSS NET B/N	GROSS NET B/N	Move **DOWN** menu structure	Decrease digit value by 1	Switches the display mode from gross to net, or from net to gross; If a tare value has been entered or acquired, the net value is the gross weight minus the tare; gross mode is represented by the G annunciator; net mode is represented by the NET annunciator
TARE	TARE	-	Confirm digit	Performs one of several predetermined Tare functions dependent on the mode of operation selected in the TARE FN parameter;
UNITS	UNITS	Move **LEFT** in menu structure	Delete current digit and move left	Switches the weight display to an alternate unit; The alternate unit is defined in the Configuration menu, and could be kg, g, lb, oz, tn or t;
PRINT	PRINT	Move **RIGHT** in menu structure	Move right one digit	Turns the unit ON/OFF: If ON, press and hold for five seconds to turn unit OFF If OFF, press and hold for two seconds to turn unit ON Press momentarily to send on-demand print format out the configured port, provided the conditions for standstill are met; RS-232 is default port

Table 3-1. Buttons and Descriptions

3.2 LCD Annunciators

The 380/380X/381 display uses LCD annunciators to provide additional information about the value being displayed and battery status.

Figure 3-2. LCD Display

LCD	Description
→0←	The Center of Zero annunciator – Indicates the current gross weight reading is within ± 0.25 display divisions of the acquired zero; A display division is the resolution of the displayed weight value, or the smallest incremental increase or decrease which can be displayed or printed
G	Gross annunciator - Gross weight display mode
Net	Net annunciator – Net weight display mode
LT	Tare annunciator – Indicates a push-button tare weight has been acquired and stored in memory
PT	Preset Tare annunciator – Indicates a preset tare weight has been keyed in or entered and stored in memory
	Battery annunciator – Indicates remaining battery capacity • 3 bars - >95% capacity remaining • 2 bars - 5-95% capacity remaining • 1 bar - 1-5% capacity remaining • 0 bars - <1% capacity remaining
~	Unstable annunciator – Scale is unstable or outside the specified motion band; Some operations, including zero, tare and print, can only be done when the unstable annunciator is off
tn ozlb kg	Unit displayed annunciator – Displays which unit of measure is being used; units available are lb (pounds), kg (kilograms), t (tonnes), g (grams), tn (short ton), oz (ounce)

Table 3-2. LCD Annunciators

3.3 General Navigation

The front panel scale function buttons are also used to navigate through the menu structure.

- UNITS and PRINT move left and right (horizontally) in a menu level
- ZERO and GROSS/NET/B/N move up and down to different menu levels and to exit a menu
- TARE enters a menu or parameter and selects/saves parameter settings or values if in a value entry mode
- Press and hold ZERO for five seconds to access user mode
- Use the ZERO, GROSS/NET/B/N, UNITS and PRINT to enter a value and press TARE to accept the value

© Rice Lake Weighing Systems ● All Rights Reserved

3.3.1 Numeric Value Entry

Several parameters in the menu structure require the entry of a numeric value rather than the making of a selection. Numbers are entered in two steps. First the numeric digits are entered, then the decimal point is positioned.

Follow this procedure to enter a numeric value:

1. Press GROSS NET B/N to enter into a parameter. The current parameter value displays. The current position in the string continuously blinks.
2. Press UNITS and PRINT to change location of flashing digit. Adjust digit as follows until desired number is selected.
3. Press ZERO and GROSS NET B/N to change the flashing digit.
4. Press TARE to save numeric digits. Decimal position slowly flashes.
5. Press UNITS and PRINT to change the location of the decimal.
6. Press TARE to confirm the new value and exit editor. The next parameter in the menu displays.

NOTE: Pressing ZERO also saves the new value. The next parameter in the menu displays.
NOTE: There is no decimal place to the right of the right-most digit.

3.3.2 Alphanumeric Entry

Several parameters in the menu structure require the entry of an alphanumeric value rather than the making of a selection.

NOTE: The end of the alphanumeric character string is indicated by the "_" character symbol.

Follow this procedure to enter an alphanumeric value:

1. Press GROSS NET B/N to enter into a parameter. The current parameter entry displays. The current position in the string continuously blinks.
2. Press UNITS or PRINT to change the blinking character to be edited.
3. Perform one of the following actions:
   - Press TARE to add a new character or space to the left of the blinking character
   - Press GROSS NET B/N twice to delete blinking character
   - Press GROSS NET B/N once to edit blinking character; Proceed to next step
4. Press UNITS or PRINT to scroll through available ASCII characters (Table 10-4 on page 66).
5. Press ZERO to accept character edit. The next character to the right continuously blinks.
6. Repeat the previous steps until alphanumeric entry is complete.
7. Press ZERO to confirm current string and exit editor. The next parameter in the menu displays.

3.4 Weigh Mode Operation

This section summarizes basic 380/380X/381 operations.

3.4.1 Zero Scale

1. In gross mode, remove all weight from the scale and wait for the "~" annunciator to turn off.
2. Press ZERO. The →0← displays to indicate the scale is zeroed.

NOTE: The scale must be stable and within the configured zero range for the scale to be zeroed. If the scale cannot be zeroed, see Section 10.1 on page 61.

3.4.2 Print Ticket

1. Wait for the "~" annunciator to turn off.
2. Press PRINT to send data to the configured port. The default print port is RS-232.

If the "~" annunciator is displayed when the PRINT is pressed, the print action only occurs if the scale comes out of motion within three seconds. If the scale stays in motion for over three seconds, the PRINT press is ignored.

3.4.3 Toggle Units

Press UNITS to toggle between primary and secondary units. The LCD annunciator representing the current unit is displayed.

3.4.4 Toggle Gross/Net Mode

Net mode is available when a tare value has been entered or acquired (Net = Gross minus Tare). If tare has not been entered or acquired, the display remains in gross mode. The LCD annunciator G or NET indicates the current mode.

Press GROSS NET B/N to toggle the display mode between gross and net.

3.4.5 Acquire Tare

1. Place a container on the scale and wait for the "~" annunciator to turn off.
2. Press TARE to acquire the tare weight of the container. Then Net weight displays, and the Net and LT annunciators are displayed.

3.4.6 Remove Tare Value

1. Remove all weight from the scale and wait for the "~" annunciator to turn off. The display reads the negative tare value.
2. Press ZERO to zero the scale, if needed.
3. Press TARE (or ZERO in OIML mode). Display changes to gross weight and the Gross annunciator turns on.

3.4.7 Preset Tare (Keyed Tare)

Tare mode must be set to keyed or both for the preset tare feature to function.

1. Remove all weight from the scale and wait for the the "~" annunciator to turn off and →0← annunciator to display.
2. Press and hold TARE for five seconds. Indicator will enter numeric entry mode.
3. Use the navigation keys to enter the tare weight value. See Section 3.3.1 on page 34.
4. Press TARE to terminate numeric entry mode; press TARE a second time to terminate preset tare entry mode.
5. The display changes to net weight, the **Net** and **PT** annunciators display.

NOTE: Press TARE again while the "~" annunciator is off, or enter a keyed tare of zero to remove the preset tare value.

© Rice Lake Weighing Systems ● All Rights Reserved

3.5 User Mode Menu

User Menu provides access to all menus in Section 4.0 on page 38 except for the Setup menu. For more information on each of the menus, see the following sections:

- Audit Menu - Section 4.3 on page 40
- Accumulator Menu - Section 4.5 on page 47
- Tare Menu - Section 4.5 on page 47

3.5.1 Display a Stored Tare

1. Press ZERO for five seconds to enter user mode. AUdit displays.
2. Press UNITS or PRINT until tArE displays.
3. Press GROSS NET B/N to enter tare menu. dSPtAr displays.
4. Press GROSS NET B/N to display the stored tare value.
5. Press ZERO four times to return to weigh mode.

If there is not a tare in the system, the value displayed is zero.

3.5.2 Clear a Stored Tare

1. Press ZERO for five seconds to enter user mode. AUdit displays.
2. Press UNITS or PRINT until tArE displays.
3. Press GROSS NET B/N to enter tare menu. dSPtAr displays.
4. Press PRINT. CLrtAr displays.
5. Press GROSS NET B/N to clear the stored tare value. oK displays.
6. Press ZERO three times to return to weigh mode.

3.5.3 View Legally Relevant Version

1. Press ZERO for five seconds to enter user mode. AUdit displays.
2. Press GROSS NET B/N. Lru displays.
3. Press GROSS NET B/N. The legally relevant version displays.
4. Press ZERO three times to return to weigh mode.

3.5.4 Display Accumulator

1. Press ZERO for five seconds to enter user mode. AUdit displays.
2. Press UNITS or PRINT until ACCUn displays.
3. Press GROSS NET B/N. dSPACn displays.
4. Press GROSS NET B/N. The accumulator value displays.
5. Press ZERO three times to return to weigh mode.

3.5.5 Print Accumulator

1. Press ZERO for five seconds to enter user mode. AUdIt displays.
2. Press UNITS or PRINT until ACCUm displays.
3. Press GROSS/NET/B/N. dSPACm displays.
4. Press PRINT. PrtACm displays.
5. Press GROSS/NET/B/N to print the accumulator value. oK displays.
6. Press ZERO three times to return to weigh mode.

3.5.6 Clear Accumulator

1. Press ZERO for five seconds to enter user mode. AUdIt displays.
2. Press UNITS or PRINT until ACCUm displays.
3. Press GROSS/NET/B/N. dSPACm displays.
4. Press UNITS. CLrACm displays.
5. Press GROSS/NET/B/N to clear the accumulator value. oK displays.
6. Press ZERO three times to return to weigh mode.

3.6 Reset (Default) Configuration

Perform the following to reset the indicator to factory settings:

NOTE: In order to reset the indicator to factory configured settings, the indicator must be in the Setup Menu (see Section 4.0 on page 38) and the CAL jumper must be removed (see Section 4.1 on page 38).

1. Access setup mode by pressing ZERO once during the startup sequence. SEtUP displays.

NOTE: When accessing Setup mode, only press ZERO once. Do not press and hold or double press ZERO.

2. Press GROSS/NET/B/N. ConFIG displays.
3. Press UNITS. dEFLt displays.
4. Press GROSS/NET/B/N. no displays.
5. Press PRINT. YES displays.
6. Press GROSS/NET/B/N to reset the configuration. oK displays.
7. Press ZERO or TARE. no displays.
8. Press ZERO three times to return to weigh mode.

© Rice Lake Weighing Systems ● All Rights Reserved

4.0 Configuration

There are two types of configuration parameters in the 380/380X/381, setup mode parameters (or Legal for Trade configuration) and user mode parameters (or non-legal configuration).

- The Setup mode parameters are accessed by pressing ZERO momentarily during the startup sequence. Only press ZERO once. Do not press and hold or double press ZERO. All menus in this section can be accessed from within Setup mode.
- The User mode can be accessed by pressing ZERO for five seconds. User mode includes all menus in this section other than the setup menu.

NOTE: The key press must end before start-up is complete.

NOTE: CAL jumper must be removed to access Setup mode parameters (see Section 4.1).

The following sections provide graphic representations of the 380/380X/381 menu structures. Most menu diagrams are accompanied by a table which describes all parameters and parameter values associated with the menu. The factory default setting appears in bold type.

NOTE: All weight related parameters must be configured prior to calibrating the unit.

4.1 Seal the Indicator

Access to setup mode is typically allowed through pressing ZERO momentarily during the power up sequence. In certain Legal for Trade applications it is necessary to restrict access to setup mode. This restriction is accomplished in two steps. First the firmware access to Setup mode must be restricted by shorting the JP3/CAL jumper on the CPU board. Then the enclosure must be secured with tamper proof seal. The 380/380X/381 all use the same method to restrict access.

NOTE: In certain Legal for Trade applications it is necessary to seal the indicator to restrict access to the CAL jumper. Breaking of the seal terminates the Legal for Trade status of the indicator because the seal limits access to the configuration menu.

4.1.1 Close the CAL Jumper

With the jumper open, the 380/380X/381 can be calibrated and configured. The jumper must be installed before the 380/380X/381 is sealed for legal for trade applications.See Figure 2-12 on page 19 for the location of the CAL jumper on the CPU board.

NOTE: Always place jumper onto JP3 directly aligned with the pins. If jumper is rotated or mis-aligned, the jumper will be damaged.

To restrict firmware access to the 380/380X/381 indicator for Legal for trade applications:

1. Short the CAL jumper to restrict access to setup mode.
2. Install the cover over the CAL jumper to protect access to the jumper. (Optional)

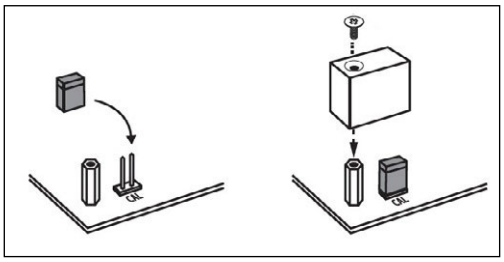

Figure 4-1. Closing the CAL Jumper

4.1.2 Seal the 380/380X

To seal the 38/380X indicator to restrict access of the CAL jumper, electronics, electrical contacts and Legal for Trade configuration parameters:

1. Short the CAL jumper to restrict access to setup mode. (Figure 4-1 on page 38)
2. Torque the four front plate screws to 10 in-lb (1.1 N-m).
3. Navigate the lead sealing wire through the lower two fillister head screws on the front plate and the hole at the bottom center of the front plate, as shown in Figure 4-2.
4. Seal the wire to secure.

NOTE: CAL jumper must be in place to prevent access to Setup mode at startup (Figure 4-1 on page 38).

Figure 4-2. Sealing the 380/380X Indicator – No Access

4.1.3 Seal the 381

The 381 is sealed with a self-destructive adhesive label (PN 162882) placed over the seam between the two halves of the indicator. The seal prevents the front and back from being separated and prohibits access to the jumper .

1. Short the CAL jumper to restrict access to setup mode. (Figure 4-1 on page 38)
2. Seal 381 with two self destructive adhesive labels placed over the seam between the two halves of the indicator.

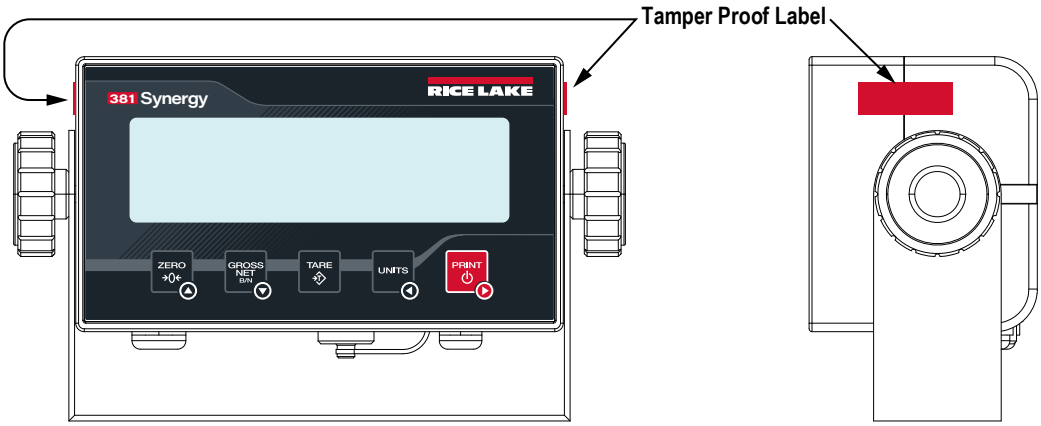

Figure 4-3. Sealing the 381 Indicator – No Access

© Rice Lake Weighing Systems ● All Rights Reserved

4.2 Main Menu

Figure 4-4. Main Menu

NOTE: * Only visible in setup mode.

NOTE: ** Only visible with RTC option installed.

Parameter	Description
SEtUP	Setup – Set configuration parameters for indicator *(only visible in setup mode)*; see Section 4.3
ACCUm	Accumulator – Displays, prints and clears accumulated weight value; see Section 4.4 on page 46
tArE	Tare – Displays and clears stored tare value; see Section 4.5 on page 47
tImE	Time – Displays the time and allows the time to be edited (24-hour) *(Only visible with RTC option installed)*
dAtE	Date – Displays the date and allows the date to be edited *(Only visible with RTC option installed)*
uErS	Version – Displays the installed firmware version number
AUdIt	Audit – Displays the legally relevant firmware version number; see Section 4.6 on page 47

Table 4-1. Main Menu Descriptions

4.3 Setup Menu

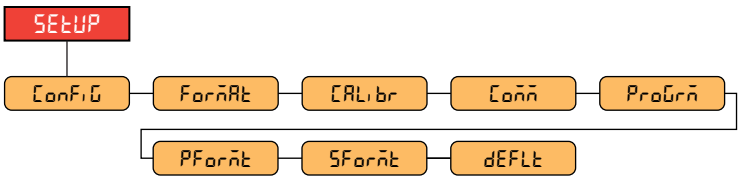

Figure 4-5. Setup Menu

NOTE: Setup menu is only visible in setup mode.

Parameter	Description
ConFIG	Configuration – See Section 4.3.1 on page 41 for menu structure and parameter descriptions of the Configuration menu
FormAt	Format – See Section 4.3.2 on page 42 for menu structure and parameter descriptions of the Format menu
CALIbr	Calibration – See Section 4.3.3 on page 42 for menu structure and parameter descriptions of the Calibration menu
Comm	Communication – See Section 4.3.4 on page 43 for menu structure and parameter descriptions of the Communication menu
ProGrm	Program – See Section 4.3.5 on page 44 for menu structure and parameter descriptions of the Program menu
PFormt	Print Format – See Section 4.3.6 on page 45 for menu structure and parameter descriptions of the Print Format menu
SFormt	Stream Format – See Section 4.3.7 on page 46 for menu structure and parameter descriptions of the Stream Format menu
dEFLt	Default Configuration – Resets settings to indicator default

Table 4-2. Setup Menu Descriptions

4.3.1 Setup – Configuration Menu

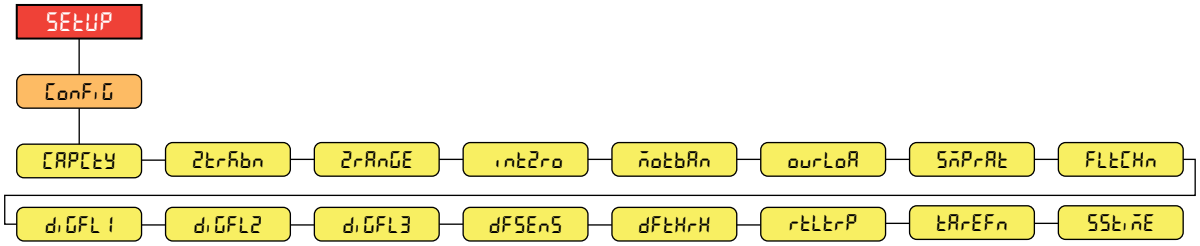

Figure 4-6. Setup – Configuration Menu

Parameter	Description
CAPCtY	Capacity – Maximum rated capacity of the scale; *Enter value: 0.000001–99999.0,* ***10000.0*** *(default)*
2trAbn	Zero Track Band – Automatically zeros the scale when within the range specified, as long as the input is within the 2rAnGE and scale standstill; Max legal value depends on local regulations; Specify the zero tracking band in ± display divisions; *Enter value: 0.0–100.0,* ***0.0*** *(default)*
2rAnGE	Zero Range – The total amount the scale can be zeroed; Zero range represents a percentage of capacity; The default value of 1.9 represents ±1.9% around the calibrated zero point, for a total range of 3.8%; A value of 0.0 prevents zeroing; Maximum legal value depends on local regulations; *Enter value: 0.0–100.0,* ***1.9*** *(default)*
int2ro	Initial Zero Range – When the indicator is turned on and the weight value is between the ± percent range specified of Calibrated Zero, the indicator automatically zeros off the weight; *Enter value: 0.0–100.0,* ***0.0*** *(default)*
ñotbAn	Motion Band – Sets the level, in display divisions, at which scale motion is detected; If motion is not detected for the time defined by SS tiME, the motion annunciator is not displayed; Some operations, including print, tare, and zero, require the scale to be at standstill; Maximum legal value varies depending on local regulations; If this parameter is set to 0, the motion annunciator is never lit and operations requiring standstill are performed regardless of scale motion; If 0 is selected, 2trAbnd must also be set to 0; *Enter value: 0–100,* ***1*** *(default)*
ourLoA	Overload – Determines the point at which the display blanks and the overload error message displays (^^^^^^); Maximum legal value varies depending on local regulations; *Settings:* ***FS+2%*** *(default), FS+1D, FS+9D, FS*
SñPrAt	Sample Rate – Selects measurement rate, in samples per second, of the analog-to-digital converter; Lower sample rate values provide greater signal noise immunity; *Settings: 5HZ, 6HZ, 10HZ, 12HZ, 20HZ,* ***25HZ (Default)****, 40HZ, 50HZ, 80HZ, 100HZ*
FLtCHn	Filter Chain Type – Sets the filter type to be used; *Settings:* **AVGONLY** (default) – Digital Rolling Average Filter (Section 10.5.1 on page 64); Uses DIGFL1-3, DFSENS and DFTHRH RAW – No filtering
diGFL1-3	Digital Filters – Sets the digital filtering rate used to reduce the effects of environmental influences from the immediate area of the scale; Settings indicate the number of A/D conversions per update which are averaged to obtain the displayed reading; a higher number gives a more accurate display by minimizing the effect of a few noisy readings, but slows down the response time of the indicator; *Settings: 1, 2,* ***4*** *(default), 8, 16, 32, 64, 128, 256*
dFSEnS	Digital Filter Sensitivity – Specifies the number of consecutive A/D readings which fall outside the Filter Threshold before filtering is suspended; *Settings:* ***2OUT*** *(default), 4OUT, 8OUT, 16OUT, 32OUT, 64OUT, 128OUT*
dFtHrH	Digital Filter Threshold – Sets a threshold value, in display divisions; when a number of consecutive A/D readings (Digital Filter Sensitivity) falls outside of this threshold value (when compared to the output of the filter), filtering is suspended and the A/D value is sent straight through the filter; Filtering is not suspended if the threshold is set to NONE; *Settings:* ***NONE*** *(default), 2D, 5D, 10D, 20D, 50D, 100D, 200D, 250D*
rtLtrP	RattleTrap – Enables RattleTrap filtering; Effective at eliminating vibration effects, environmental influences and mechanical interference from nearby machinery, may increase response time over standard digital filtering; *Settings:* ***OFF*** *(default), ON*
tArEFn	Tare Function – Enables or disables push-button and keyed tare; *Settings:* ***BOTH*** *(default)* – Both push-button and keyed tare are enabled *NOTARE* – No tare allowed (gross mode only) *PBTARE* – Push-button tares enabled *KEYED* – Keyed tare enabled
SSti ñE	Standstill Time – Specifies the length of time the scale must be out of motion, before the scale is considered to be at standstill (in 0.1 sec intervals); *Enter value: 0–600,* ***10*** *(default)*

Table 4-3. Setup – Configuration Menu Descriptions

© Rice Lake Weighing Systems ● All Rights Reserved

4.3.2 Setup – Format Menu

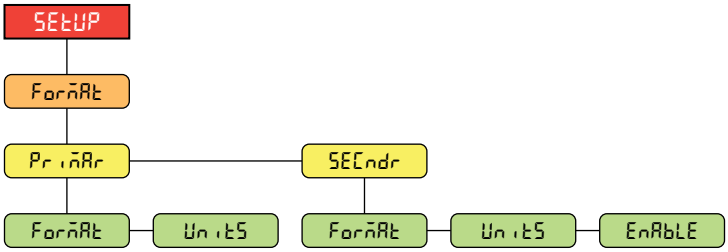

Figure 4-7. Format – Primary and Secondary Menus

Parameter	Description
FormAt	Format – Sets the decimal point and the display divisions for the Primary (PrimAr) and Secondary (SECndr) display weight format; For example, select *888.885* if a count by of 0.005 is needed or select *888820* if a count by of 20 is needed (the *8*s serve as placeholders and show a breakdown of how digits will display); *Settings:* ***888881*** *(Primary default), 888882, 888885, 888810, 888820, 888850, 888100, 888200, 888500, 8.88881, 8.88882, 8.88885, 88.8881, 88.8882, 88.8885, 888.881, 888.882, 888.885, 8888.81, 8888.82, 8888.85, 88888.1, 88888.2, 88888.5 (Secondary default)*
UnitS	Units – Sets the units type; *Settings:* ***LB*** *(Primary default), KG (Secondary default), OZ, TN, T, G, NONE*
EnAbLE	Enabled – Enables UNITS button to toggle between the primary and secondary units; *Settings:* ***ON*** *(default), OFF*

Table 4-4. Format – Primary and Secondary Menu Description

4.3.3 Setup – Calibration Menu

For more information on Calibration procedures, see Section 5.0 on page 48.

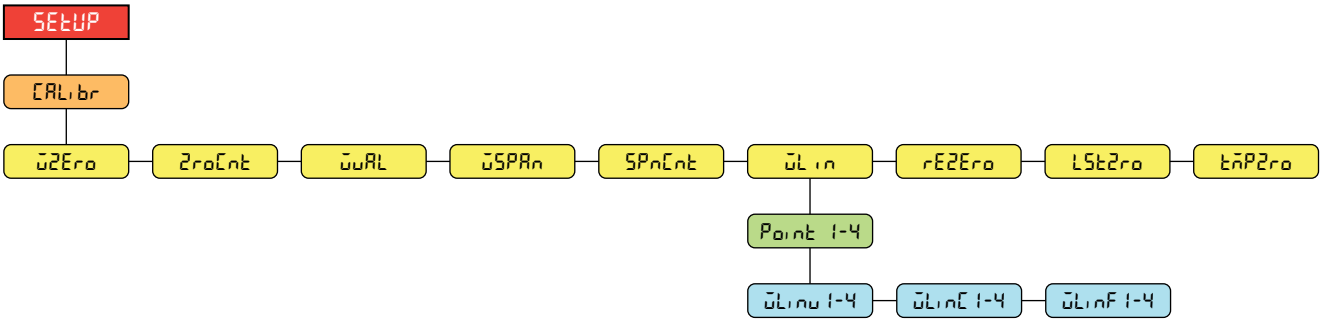

Figure 4-8. Setup – Calibration Menu

Parameter	Description
uZEro	Zero Calibration – Executes the zero calibration process;
ZroCnt	Zero Calibration Count – Displays the raw count value at the zero weight; A zero calibration (WZERO) generates this raw count value; Manually changing this count value changes the zero weight and negates the zero calibration
uuAL	Test Weight Value – Sets the weight value for the span calibration; *Enter value: 0.000001–999999.999999,* ***10000.0*** *(default)*
uSPAn	Span Calibration – Executes the span calibration process;
SPnCnt	Span Calibration Count – Displays the raw count value at the span weight; A span calibration (WSPAN) generates this raw count value; Manually changing this count value changes the span weight and negates the span calibration

Table 4-5. Setup – Calibration Menu Description

Parameter	Description
ULin	Linear Calibration – A linear or multi-point calibration is performed by entering up to four additional calibration points; WLIN V# – Sets the test weight value for linear calibration point WLIN C# – Executes the linear calibration process for the point; generates the raw count value (F) for the test weight value (V) WLIN F# – Displays the raw count value at the linear point weight; A linear calibration (WLIN C#) generates this raw count value; Manually changing this count value changes the linear point weight and negates the linear calibration for the point
rEZEro	Rezero – Removes an offset value from the zero and span calibrations
LStZro	Last Zero – Takes the last pushbutton zero in the system (from weigh mode) and uses it as the new zero reference point, after which a new span calibration must be performed; This calibration cannot be performed when calibrating a scale for the first time
tnPZro	Temporary Zero – Temporarily zeros the displayed weight of a non-empty scale, after a span calibration was performed; The difference between the temporary zero and the previously calibrated zero value is used as an offset

Table 4-5. Setup – Calibration Menu Description (Continued)

4.3.4 Setup – Communication Menu

Serial Port supports RS-232 serial communication. USB port supports USB virtual COM port.

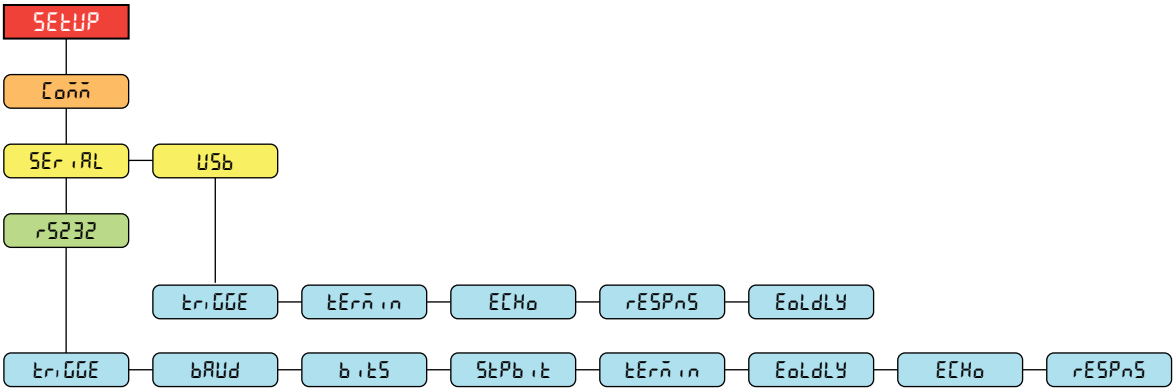

Figure 4-9. Communication – Serial Port Menu

Parameter	Description
triGGE	Trigger – Sets the input trigger type; *Settings:* ***CMD*** *(default) – Command: allows operation of EDP commands and printing* *STRIND – Stream Industrial Scale Data: data is updated up to the configured sample rate; allows operation of EDP commands and printing* *STRLFT – Stream Legal for Trade Data: data is updated at the configured display update rate; allows operation of EDP commands and printing*
bAUd	Baud Rate – Sets the transmission speed for the port (RS-232 only); *Settings: 1200, 2400, 4800,* ***9600*** *(default), 19200, 38400, 57600, 115200*
bitS	Data Bits – Sets number of data bits transmitted or received by the port and specifies the parity bit to odd, even or none (RS-232 only); *Settings:* ***8NONE*** *(default), 7EVEN, 7ODD*
StPbit	Stop Bits – Sets the number of stop bits transmitted or received by the port (RS-232 only); *Settings:* ***1*** *(default), 2*
tErmin	Outgoing Line Termination – Sets the termination characters for data sent from the port; *Settings:* ***CR/LF*** *(default), CR*
EoLdLY	End of Line Delay – Sets the delay period from when a formatted line is terminated to the beginning of the next formatted serial output (measured in 0.1 second intervals); *Enter value: 0–255,* ***0*** *(default)*
ECHo	Echo – Specifies if characters received by the port are echoed back to the sending unit; *Settings:* ***ON*** *(default), OFF*
rESPnS	Response – Specifies if the port transmits replies to serial commands; *Settings:* ***ON*** *(default), OFF*

Table 4-6. Communication – Serial Port Menu Description

© Rice Lake Weighing Systems ● All Rights Reserved

4.3.5 Setup – Program Menu

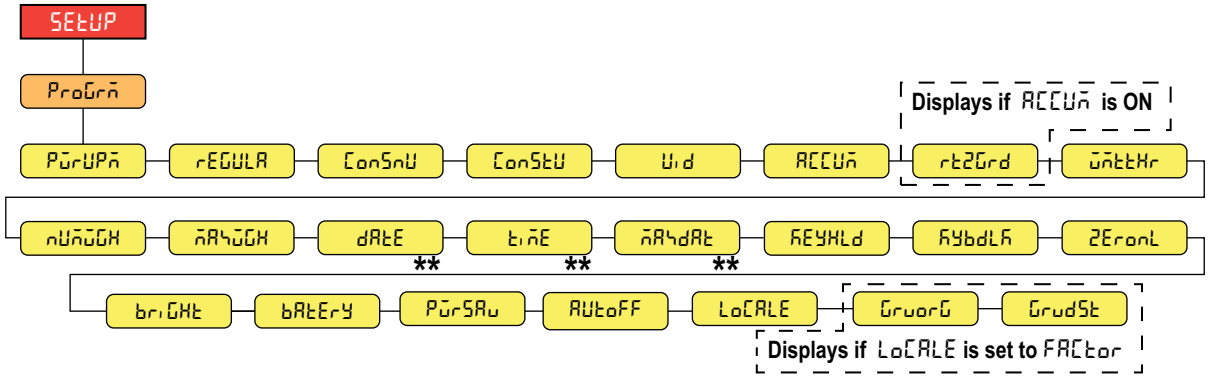

Figure 4-10. Setup – Program Menu

NOTE: ** Only visible with RTC option installed.

Parameter	Description
PUrUPA	Power Up Mode – When the indicator is turned on, it performs a display test, then enters a warm up period; *Settings:* ***GO*** *(default)* – Performs display test, then enters weigh mode after brief warm up period *DELAY* – Performs display test, then enters a warm up period of 30 seconds • If no motion is detected during warm up period, indicator enters weigh mode when warm up period ends • If motion is detected, the 30 second timer is reset and the warm up period is repeated
rEGULA	Regulatory Mode – Specifies the regulatory agency having jurisdiction over the scale site; the value specified for this parameter affects the function of the front panel tare and zero keys; Settings: **NTEP** (default), OIML, CANADA, NONE • OIML, NTEP, and CANADA modes allow a tare to be acquired at a weight greater than zero; NONE allows tares to be acquired at any weight value • OIML, NTEP, and CANADA modes allow a tare to be cleared only if the gross weight is at no load; NONE allows tares to be cleared at any weight value • NTEP and OIML modes allow a new tare to be acquired even if a tare is already present; In CANADA mode, the previous tare must be cleared before a new tare can be acquired • NONE, NTEP and CANADA modes allow the scale to be zeroed in either gross or net mode as long as the current weight is within the specified ZRANGE; In OIML mode, the scale must be in gross mode before it can be zeroed; pressing the ZERO key in net mode clears the tare
ConSnU	Consecutive Numbering – Allows sequential numbering for print operations; the value is incremented following each print operation which includes <CN> in the ticket format; *Enter value: 0–999999,* ***0*** *(default)*
ConStU	Consecutive Number Startup Value – Specifies the initial consecutive number (CONSNU) value used when the consecutive number is reset by sending KCLRCN EDP serial command; *Enter value: 0–999999,* ***0*** *(default)*
Uid	Unit ID – Specifies the unit identification string with an alphanumeric value; *Enter characters: Up to 8 alphanumeric characters,* ***1*** *(default)*
ACCUA	Accumulator – Accumulation can be toggled ON/OFF; if ON, accumulation occurs on print operation; if OFF, an accumulation does not occur; *Settings:* ***OFF*** *(default), ON*
rtZGrd	Return to Zero Grads – When the weight (in display graduations) falls below the value set, the accumulator is rearmed; *Enter Value: 0.0-100.0,* ***0.4*** *(default)*
UAtEHr	Weighment Threshold – When the weight exceeds the value set, the number of weighments counter is incremented; *Enter value: 0.0–999999.0,* ***1000.0*** *(default)*
nUAUGH	Number of Weighments – Displays the total number of weighments; *Read only*
AAYUGH	Maximum Weighment – Displays the maximum weighment made; *Read only*
AAYdAt	Date/Time of Max Weight – Displays the date the maximum weighment occurred; *Read only (only available when RTC is installed)*
dAtE	Date – Allows setting of the date format and date separator character; *(only available when RTC is installed)* DATEFMT – Date Format; Settings: **MMDDYY** (default), DDMMYY, YYMMDD, YYDDMM DATESEP – Date Separator; Settings: **SLASH** (default), DASH, SEMI, DOT
tiAE	Time – Allows setting of the time format and the separator character; *(only available when RTC is installed)* TIMEFMT – Time Format; Settings: **12HOUR** (default), 24HOUR TIMESEP – Time Separator; Settings: **COLON** (default), COMMA, DOT

Table 4-7. Setup – Program Menu Description

Parameter	Description
KEYHLd	Key Hold – Allows setting of the key hold time and interval HLDTME – Key hold time (in tenths of a second); 20 equals 2 seconds; *Enter value: 10–50,* ***20*** *(default)* INTRVL – Key hold time interval; the amount of time between increments during a key hold (in twentieths of a second); 2 equals a tenth of a second (10 increments per second during a key hold); *Enter value: 1–100,* ***2*** *(default)*
KYbdLK	Keyboard Lock – Disables the keyboard except power; *settings:* ***OFF*** *(Default), ON*
2EronL	Zero Only – Disables the keyboard except Zero and Power; *settings:* ***OFF*** *(Default), ON*
briGht	Brightness of Back Light; settings: **LOW** (default), MED, HIGH, OFF
bAtEry	Battery – Power supply via battery NONE – No battery ALK – Alkaline battery (non-rechargable) NIMH – Nicken Metal Hydrade LITHIM – Lithium Ion
PurSAu	Power Saving mode – Energy saving for battery operation **NONE** (default) LOW – Turns off backlight after 30 seconds of no activity; changing weight or a button press will illuminate the backlight HIGH – Turns off backlight and load cell after 30 seconds at zero weight; any button must be pressed to wake up indicator
AUtoFF	Auto Off Time – Time (in minutes) at zero weight after which the scale will power off. A setting of 0 will not power off; *Settings:* ***0*** *(default) - 60*
LoCALE	Location Gravity Compensation – Enables gravity compensation; *Settings:* **OFF** (default) – gravity compensation disabled FACTOR – uses origin and destination gravity factors to find gravity compensation
GruorG	Gravity of Origin – Original gravity factor (in m/s^2) for gravity compensation; displays when LOCALE parameter is set to FACTOR; *Enter value: 9.00000–9.99999,* ***9.80665*** *(default)*
GrudSt	Gravity of Destination – Destination gravity factor (in m/s^2) for gravity compensation; displays when LOCALE parameter is set to FACTOR*; Enter value: 9.00000–9.99999,* ***9.80665*** *(default)*

Table 4-7. Setup – Program Menu Description (Continued)

4.3.6 Setup – Print Format Menu

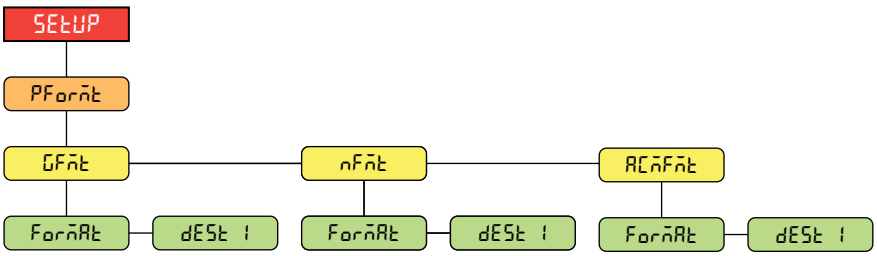

Figure 4-11. Setup – Print Format Menu

Parameter	Description
GFAt	Gross Format – Gross demand print format string FORMAT – *Enter characters: Alphanumeric entry up to 300 characters,* ***Gross<g><nl2>*** *(default)* DEST 1 – Destination ports; *Settings:* ***RS-232****, USB, NONE*
nFAt	Net Format – Net demand print format string FORMAT – *Enter characters: Alphanumeric entry up to 300 characters,* ***Gross<g><nl>Tare<sp><t><nl>Net<sp2><n><nl2>*** *(default)* DEST 1 – Destination ports; *Settings:* ***RS-232****, USB, NONE*
ACAFAt	Accumulator Format – Accumulator print format string FORMAT – *Enter characters: Alphanumeric entry up to 300 characters,* ***Accum <a><nl>****(default)* DEST 1 – Destination ports; *Settings:* ***RS-232****, USB, NONE*

Table 4-8. Setup – Print Format Menu Description

© Rice Lake Weighing Systems ● All Rights Reserved

4.3.7 Setup – Stream Format Menu

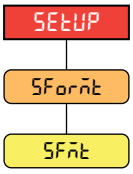

Figure 4-12. Setup – Stream Format Menu

Parameter	Description
SFmt	Stream Format – Specifies the stream format used for streaming output of scale data; *Settings:* ***RLWS*** *(default) – Rice Lake Weighing Systems stream format; see Section 10.3.1 on page 62* *CRDNAL – Cardinal stream format; see Section 10.3.2 on page 62* *WTRNIX – Avery Weigh-Tronix stream format; see Section 10.3.3 on page 63* *TOLEDO – Mettler Toledo stream format; see Section 10.3.4 on page 63*

Table 4-9. Setup – Stream Format Menu Description

4.4 Accumulator Menu

Figure 4-13. Accumulator Menu

Parameter	Description
dSPACm	Display Accumulator – Displays the accumulator value; *Read Only*
PrtACm	Print Accumulator – Prints the accumulator value to specified port, if setup
CLrACm	Clear Accumulator – Clears the accumulator value

Table 4-10. Accumulator Menu Description

4.5 Tare Menu

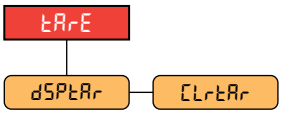

Figure 4-14. Tare Menu

Parameter	Description
dSPtAr	Display Tare – Displays the current tare value; *Read Only*
CLrtAr	Clear Tare – Clears the current tare value

Table 4-11. Tare Menu Description

4.6 Audit Menu

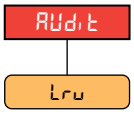

Figure 4-15. Audit Menu

Parameter	Description
Lru	LRV – Legally relevant firmware version

Table 4-12. Audit Menu Description

© Rice Lake Weighing Systems ● All Rights Reserved

5.0 Calibration

The 380/380X/381 can be calibrated using the front panel or EDP commands. The following sections describe the procedures required for these calibration methods.

NOTE: CAL jumper must be removed to perform calibration.

NOTE: The 380/380X/381 requires a WZERO and WSPAN points to be calibrated. The linear calibration points are optional; they must fall between zero and span, but must not duplicate zero or span.

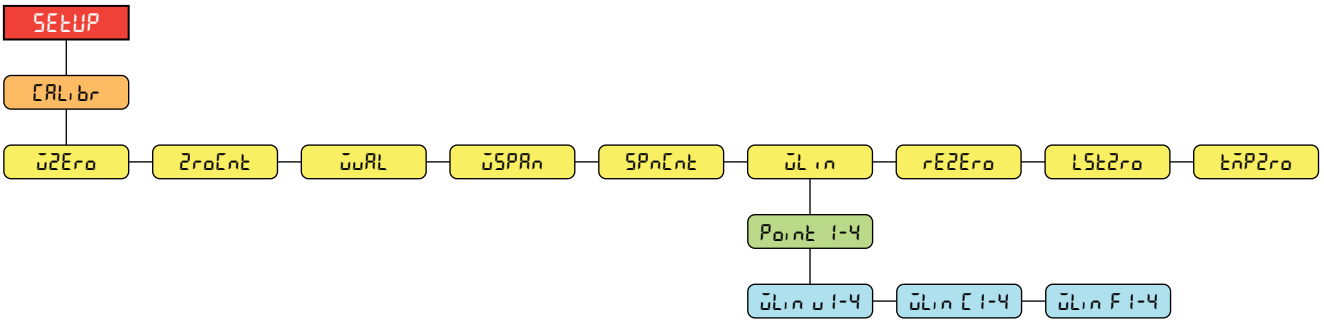

Figure 5-1. Calibration Menu

5.1 Front Panel Calibration

5.1.1 Span Calibration

Use the following steps to perform a standard span calibration on a connected scale.

1. Access the setup menu by pressing ZERO momentarily during power up. SEtUP displays.

NOTE: When accessing Setup mode, only press ZERO once. Do not press and hold or double press ZERO.

NOTE: CAL jumper must be removed to perform calibration (see Section 4.1 on page 38).

2. Press GROSS NET B/N once. ConFiG displays
3. Press PRINT twice. CALibr displays.
4. Press GROSS NET B/N. uZEro displays.

NOTE: See Section 5.2 on page 49 if the application requires a rezero, last zero or temporary zero.

5. Ensure there is no weight on the scale.
6. Press GROSS NET B/N to perform a zero calibration. oK displays.
7. Press TARE. ZroCnt displays. See Section 4.3.3 on page 42 for more information on ZroCnt.
8. Press PRINT. uuAL displays.
9. Press GROSS NET B/N. The current test weight value displays.
10. Enter a new value, if necessary. See Section 3.3.1 on page 34 for more information on numeric entry.
11. Press TARE to accept value. uSPAn displays.
12. Place the specified amount of test weight on the scale.
13. Press GROSS NET B/N to perform a span calibration. oK displays.
14. Press TARE. SPnCnt displays. See Section 4.3.3 on page 42 for more information on SPnCnt.

NOTE: Span calibration is complete. To continue with a linear calibration, proceed to Section 5.1.2 on page 49 .

15. Press ZERO three times to return to weigh mode.

5.1.2 Linear Calibration

Linear calibration points provide increased scale accuracy by calibrating the indicator at up to four additional points between the zero and span calibrations.

1. Complete steps 1–14 in Section 5.1.1 on page 48.
2. Press PRINT. WLIN displays.
3. Press GROSS NET B/N. Point 1 displays.
4. Press GROSS NET B/N. WLIN W 1 displays.
5. Press GROSS NET B/N. The current test weight value for point 1 displays.
6. Enter a new value, if necessary. See Section 3.3.1 on page 34 for more information on numeric entry.
7. Press TARE to accept value. WLIN C 1 displays.
8. Place the specified amount of test weight on the scale.
9. Press GROSS NET B/N to perform a linear point calibration. oK displays.
10. Press TARE. WLIN F 1 displays. See Section 4.3.3 on page 42 for more information on WLIN F#.
11. Press ZERO. Point 1 displays.
12. Press PRINT. Point 2 displays.
13. Repeat previous steps for points 2-4, if necessary.

NOTE: The linear calibration for a point is saved once point is calibrated.

14. Press ZERO three times to return to weigh mode.

5.2 Alternative Zero Calibrations

During a calibration, the zero value (W2Zero) can be replaced with a temporary zero (tmP2ro) or last zero (LSt2ro). A rezero (rE2Zero) can be done after calibration. See below for information on these alternative zeros.

5.2.1 Last Zero

This takes the last push-button zero in the system (from weigh mode) and uses it as the new zero reference point, after which a new span calibration must be performed. This calibration cannot be performed when calibrating a scale for the first time.

A last zero calibration is typically used on truck scales to allow a scale verification to become a calibration without having to remove the test weights.

5.2.2 Temporary Zero

A temporary zero calibration temporarily zeros the displayed weight of a non-empty scale. After span calibration, the difference between the temporary zero and the previously calibrated zero value is used as an offset.

A temporary zero calibration is typically used on hopper scales to calibrate the span without losing the original zero calibration.

5.2.3 Rezero

A rezero calibration is needed to remove a calibration offset when hooks or chains are required to suspend the test weights.

Once a span calibration is complete, remove the hooks or chains and the test weights from the scale. With all the weight removed, a rezero calibration is used to adjust the zero and span calibration values.

© Rice Lake Weighing Systems ● All Rights Reserved

5.3 EDP Command Calibration

Use the following instructions to calibrate the 380/380X/381 using EDP commands. For information on the EDP commands of the 380/380X/381, see Section 7.0 on page 52.

NOTE: The indicator must respond with OK after each step or the calibration procedure must be done again.
For commands ending with #*s*, *s* is the scale number (1).

1. Enter setup mode (Section 4.1 on page 38).

NOTE: CAL jumper must be removed to perform calibration.

2. For a standard calibration, remove all weight from scale (except hooks or chains which are needed to attach weights).
3. Send the command **SC.WZERO#*s*** to perform a standard calibration of the zero point.
   - Send **SC.TEMPZERO#*s*** to perform a temporary zero calibration
   - Send **SC.LASTZERO#*s*** to perform a last zero calibration
4. Apply the span calibration weight to the scale.
5. Send the command **SC.WVAL#*s*=*xxxxx***, where ***xxxxx*** is the value of the span calibration weight applied to the scale.
6. Send the command **SC.WSPAN#*s*** to calibrate the span point. Continue on to step 7 to calibrate additional linearization points, or proceed to step 11.
7. Apply weight equal to the first linearization point to the scale.
8. Send the command **SC.WLIN.V*n*#*s*=*xxxxx***, where ***n*** is the linearization point number (1-4) and ***xxxxx*** is the exact value of the weight applied.
9. Send the command **SC.WLIN.C*n*#*s*** to calibrate the linearization point, where ***n*** is the linearization point number (1-4).
10. Repeat steps 7–9 for up to four total linearization points.
11. If hooks or chains were used to attach the weights, remove all weight, including the hooks and chains, and send the command **SC.REZERO#*s*** to remove the zero offset.
12. Send the command **KSAVEEXIT** to return to weigh mode.

6.0 Revolution

The Revolution utility provides a suite of functions used to support configuration, calibration, customization, backing up configuration settings and updating firmware.

Calibration values and scale configuration can both be saved from and restored to the 380/380X/381 using Revolution.

NOTE: For system requirements visit the Revolution product page on Rice Lake Weighing Systems website.

6.1 Connecting to the Indicator

Connect the PC serial port to com 1 of the 380/380X/381, then click ***Connect*** in the toolbar. Revolution attempts to establish communications to the indicator. If communications settings need to be adjusted, select ***Options…*** from the Tools menu.

Downloading to the Indicator

The ***Send Configuration to Device*** function in the Revolution Communications menu allows a Revolution configuration file (with or without scale calibration data) or ticket formats to be downloaded to a connected indicator in setup mode.

The ***Send Section to Device*** function on the Communications menu allows the download of only the currently displayed object, such as a scale configuration.

Because less data is transferred using the ***Send Section to Device***, it is typically faster than a full configuration download, but there is an increased possibility the download fails due to dependencies on other objects. If the download fails, try performing a complete download using the ***Send Configuration to Device*** function.

Uploading Configuration to Revolution

The ***Get Configuration from Device*** function in the Revolution Communications menu allows the existing configuration of a connected indicator to be saved to a file on the PC. Once saved, the configuration file provides a backup which can be quickly restored to the indicator if needed. Alternatively, the file can be edited within Revolution and downloaded back to the indicator.

6.2 Saving and Transferring Data

NOTE: Revolution has a module to save and transfer data. It is the preferred method over using ProComm or Hyper Terminal.

6.2.1 Saving Indicator Data to a Personal Computer

Configuration data can be saved to a computer connected to the selected port. The PC must be running a terminal emulator such as *Tera Term or PuTTY*.

When configuring the indicator, ensure the values set for the baud and bits parameters on the serial menu match the baud rate, bits and parity settings configured for the serial port on the PC.

To save all configuration data, first put the terminal emulator into data capture mode, then place the indicator in setup mode and send the DUMPALL command to the indicator. The 380/380X/381 responds by sending all configuration parameters to the PC as ASCII-formatted text.

6.2.2 Downloading Configuration Data from PC to Indicator

Configuration data saved on a PC or disc can be downloaded from the PC to an indicator. This procedure is useful when a number of indicators with similar configurations are set up or when an indicator is replaced.

To Send Configuration to the Device, connect the PC to the selected port as described in Section 6.2.1. Place the indicator in setup mode and use the PC communications software to send the saved configuration data to the indicator. When transfer is complete, calibrate the indicator as described in Section 5.0 on page 48.

© Rice Lake Weighing Systems ● All Rights Reserved

7.0 EDP Commands

The 380/380X/381 indicator can be controlled by a personal computer connected to one of the indicator communication ports. Control is provided by a set of commands which can simulate front panel key press functions, return and change setup parameters, and perform reporting functions. The commands provide the capability to print configuration data or to save data to an attached personal computer. This section describes the EDP command set and procedures for saving and transferring data using the communication ports. The EDP command set is divided into several groups.

When the indicator processes a command, it either responds with a value (for reporting commands, or when querying parameter settings), or with the message ***OK***. The ***OK*** response verifies the command was received. If the command is unrecognized, the indicator responds with ***?? invalid command***. If the command cannot be executed in the current mode, the indicator responds with ***?? invalid mode***. If the command is recognized, but the value is out of range or the invalid type, the indicator responds with ***??*** followed by the type and the range.

7.1 Key Press Commands

Key press serial commands simulate pressing keys on the front panel of the indicator. These commands can be used in both setup and weigh mode. Several of the commands serve as pseudo keys, providing functions which are not represented by a key on the front panel.

For example, to enter a 15 lb tare weight using serial commands:

1. Type ***K1*** and press **Enter** (or **Return**).
2. Type ***K5*** and press **Enter**.
3. Type ***KTARE*** and press **Enter**.

Command	Function
KZERO	In weigh mode, this command acts like pressing the **Zero** key
KGROSSNET	In weigh mode, this command acts like pressing the **Gross/Net** key
KGROSS	Displays Gross mode (pseudo key)
KNET	Displays Net mode (pseudo key)
KTARE	In weigh mode, this command acts like pressing the **Tare** key
KUNITS	In weigh mode, this command acts like pressing the **Units** key
KPRIM	Displays primary units (pseudo key)
KSEC	Displays secondary units (pseudo key)
KPRINT	In weigh mode, this command acts like pressing the **Print** key
KPRINTACCUM	Prints the accumulated weight (pseudo key)
KDISPACCUM	Displays the accumulator value (pseudo key)
KDISPTARE	Displays the tare value (pseudo key)
KCLR	Clears number (pseudo key)
KCLRCN	Clears consecutive number (pseudo key)
KCLRTAR	Clears the tare from the system (pseudo key)
KLEFT	In setup mode, this command moves **Left** in the menu
KRIGHT	In setup mode, this command moves **Right** in the menu
KUP	In setup mode, this command moves **Up** in the menu
KDOWN	In setup mode, this command moves **Down** in the menu
KEXIT	In setup mode, this command exits to weigh mode (pseudo key)
KSAVE	In setup mode, save the current configuration (pseudo key)
KSAVEEXIT	In setup mode, save the current configuration then exit to normal mode (pseudo key)
KCLRACCUM	Clears the accumulator (pseudo key)
Kn	This command acts like pressing numbers 0 (zero) through 9 (pseudo key)
KDOT	This command acts like pressing the decimal point (.) (pseudo key)
KENTER	This command acts like pressing the **Enter** key (pseudo key)
KLOCK=x	In setup mode, this command locks specified front panel key; x = KPRINT, KUNITS, KTARE, KGROSSNET, KZERO (example: to lock the **Zero** key, enter KLOCK=KZERO
KUNLOCK=x	In setup mode, this command unlocks specified front panel key; x = KPRINT, KUNITS, KTARE, KGROSSNET, KZERO (example: to unlock the **Print** key, enter KUNLOCK=KPRINT

Table 7-1. Key Press Commands

7.2 Reporting Commands

Reporting commands return specific information to the communications port. The commands listed in Table 7-2 can be used in either setup mode or weigh mode.

Command	Function
DUMPALL	Returns a list of all parameter values
AUDIT.LRVERSION	Returns the legally relevant firmware version
VERSION	Returns the firmware version
BUILD	Returns the firmware version and build number
HWSUPPORT	Returns the CPU board part number
HARDWARE	Returns C1 if the RTC Option is installed, or FF if no option is installed

Table 7-2. Reporting Commands

7.3 Reset Configuration Command

The following command can be used to reset the configuration parameters of the 380/380X/381.

Command	Function
RESETCONFIGURATION	Restores all configuration parameters to default values (setup mode only)

Table 7-3. Reset Configuration Command

NOTE: All scale calibration settings are lost when the RESETCONFIGURATION command is run.

7.4 Parameter Setting Commands

Parameter setting commands allow the current value for a configuration parameter to be displayed or changed.

Current configuration parameter settings can be displayed in setup mode or weigh mode using the following syntax:

command<ENTER>

Most parameter values can be changed in setup mode only.

Use the following command syntax when changing parameter values: command=value<ENTER>. Use no spaces before or after the equal (=) sign. If an incorrect command is typed or an invalid value is specified, the indicator returns ***??*** followed by the error message.

Example: to set the motion band parameter on Scale #1 to 5 divisions, type the following:

SC.MOTBAND#1=5<ENTER>

To return a list of the available values for parameters, enter the command and equal sign, followed by a question mark (command=?<ENTER>). The indicator must be in setup mode to use this function.

After changes are made to configuration parameters using EDP commands, use the ***KSAVE*** or ***KSAVEEXIT*** commands to commit the changes to memory.

Command	Description	Values
SC.CAPACITY#n	Scale capacity	0.000001–999999.0, **10000.0** (default)
SC.ZTRKBND#n	Zero track band (in display divisions)	0.0–100.0, **0.0** (default)
SC.ZRANGE#*n*	Zero range in % of Full Scale (capacity)	0.0–100.0, **1.9** (default)
SC.INITIALZERO#*n*	Initial Zero range in % of full scale	0.0–100.0, **0.0** (default)
SC.MOTBAND#*n*	Motion band (in display divisions)	0–100, **1** (default)
SC.SSTIME#*n*	Standstill time (in 0.1 second intervals; 10 = 1 second)	0–600, **10** (default)
SC.OVERLOAD#*n*	Overload	**FS+2%** (default), FS+1D, FS+9D, FS
SC.MAX_WEIGHT#n	Maximum weighment (read only)	-999999–999999
SC.NUMWEIGH#n	Number of weighments (read only)	0–4294967295
For commands ending with #*n*, n is the scale number (1)		

Table 7-4. Scales Commands

© Rice Lake Weighing Systems ● All Rights Reserved

Command	Description	Values
SC.MAX_DATE#n	Date of maximum weighment (read only)	Up to 25 alphanumeric characters (Only available if RTC option is installed)
SC.WMTTHRH#n	Weighment threshold	0.0–999999.0, **1000.0** (default)
SC.DIGFLTR1#*n* SC.DIGFLTR2#*n* SC.DIGFLTR3#*n*	Number of A/D samples averaged for the individual stages (1-3) of the three stage digital filter	1, 2, **4** (default), 8, 16, 32, 64, 128, 256
SC.DFSENS#*n*	Digital filter cutout sensitivity	**2OUT** (default), 4OUT, 8OUT, 16OUT, 32OUT, 64OUT, 128OUT
SC.DFTHRH#*n*	Digital filter cutout threshold	**NONE** (default), 2D, 5D, 10D, 20D, 50D, 100D, 200D, 250D
SC.SMPRAT#*n*	Scale A/D sample rate	5HZ, 6HZ, 10HZ, 12HZ, 20HZ, **25HZ** (default), 40HZ, 50HZ, 80HZ, 100HZ
SC.PWRUPMD#*n*	Power up mode	**GO** (default), DELAY
SC.TAREFN#*n*	Tare function	**BOTH** (default), KEYED, NOTARE, PBTARE
SC.PRI.FMT#*n*	Primary units format (decimal point and display divisions)	888100, 888200, 888500, 888810, 888820, 888850, **888881** (default), 888882, 888885, 88888.1, 88888.2, 88888.5, 8888.81, 8888.82, 8888.85, 888.881, 888.882, 888.885, 88.8881, 88.8882, 88.8885, 8.88881, 8.88882, 8.88885
SC.PRI.UNITS#*n*	Primary units	**LB** (default), KG, OZ, TN, T, G, NONE
SC.SEC.FMT#*n*	Secondary units format (decimal point and display divisions)	888100, 888200, 888500, 888810, 888820, 888850, 888881, 888882, 888885, 88888.1, 88888.2, **88888.5** (default), 8888.81, 8888.82, 8888.85, 888.881, 888.882, 888.885, 88.8881, 88.8882, 88.8885, 8.88881, 8.88882, 8.88885
SC.SEC.UNITS#*n*	Secondary units	LB, **KG** (default), OZ, TN, T, G, NONE
SC.SEC.ENABLED#*n*	Enable the Secondary Units	**ON** (default), OFF
SC.FILTERCHAIN#*n*	Defines what filter to use	**AVGONLY** (default), RAW
SC.RTZGRAD#*n*	Number of graduations from the zero base at which the accumulator re-arms itself	0.0–100.0, **0.4** (default)
SC.ACCUM#*n*	Accumulator enable	**OFF** (default), ON
SC.WZERO#*n*	Perform zero calibration	—
SC.TEMPZERO#*n*	Perform temporary zero calibration	—
SC.LASTZERO#*n*	Perform last zero calibration	—
SC.WVAL#*n*	Test weight value	0.000001–999999.999999, **10000.0** (default)
SC.WSPAN#*n*	Perform span calibration	—
SC.WLIN.F1#*n*– SC.WLIN.F4#*n*	Actual raw count value for linearization points 1–4	0–16777215, **0** (default)
SC.WLIN.V1#*n*– SC.WLIN.V4#*n*	Test weight value for linearization points 1–4 (A setting of 0 indicates the linearization point is not used)	0.000001–999999.999999, **0.0** (default)
SC.WLIN.C1#*n*– SC.WLIN.C4#*n*	Perform linearization calibration on points 1–4	—
SC.LC.CD#*n*	Zero (deadload) coefficient raw count value	0–16777215, **8386509** (default)
SC.LC.CW#*n*	Span coefficient raw count value	0–16777215, **2186044** (default)
SC.LC.CZ#*n*	Temporary zero raw count value	0–16777215, **2186044** (default)
SC.REZERO#*n*	Perform the Rezero calibration function	—
For commands ending with #*n*, n is the scale number (1)		

Table 7-4. Scales Commands (Continued)

7.5 USB Setting Commands

Command	Description	Values
USB.TRIGGER	USB serial function	**CMD** (default), STRIND, STRLFT
USB.LINETERM	USB line termination characters	**CR/LF** (default), CR
USB.ECHO	USB echo	ON, **OFF** (default)
USB.RESPONSE	USB response	**ON** (default), OFF
USB.EOLDLY	USB end-of-line delay	0–255 (0.1-second intervals), **0** (default)

Table 7-5. USB Port Commands

7.6 EDP Setting Commands

Command	Description	Values
EDP.TRIGGER#*p*	Port serial function	**CMD** (default), STRIND, STRLFT
EDP.BAUD#*p*	Port baud rate	1200, 2400, 4800, **9600** (default), 19200, 38400, 57600, 115200
EDP.BITS#*p*	Port data bits/parity	**8NONE** (default), 7EVEN, 7ODD
EDP.TERMIN#*p*	Port line termination characters	**CR/LF** (default), CR
EDP.STOPBITS#*p*	Port stop bits	**1** (default), 2
EDP.ECHO#*p*	Port echo	**ON** (default), OFF
EDP.RESPONSE#*p*	Port response	**ON** (default), OFF
EDP.EOLDLY#*p*	Port end-of-line delay	0–255 (0.1-second intervals), **0** (default)
For commands ending with #*p*, p is the port number (1); This is a 1-port device		

Table 7-6. Serial Port Commands

7.7 Stream Setting Commands

Command	Description	Values
STRM.FORMAT#*n*	Stream format	**RLWS** (default), CRDNAL, WTRNIX, TOLEDO
For commands ending with #*n*, n is the stream format number (1)		

Table 7-7. Stream Formatting Commands

7.8 Feature Commands

Command	Description	Values
DATEFMT	Date format **	**MMDDYY** (default), DDMMYY, YYMMDD, YYDDMM
DATESEP	Date separator **	**SLASH** (default), DASH, SEMI, DOT
TIMEFMT	Time format **	**12HOUR** (default), 24HOUR
TIMESEP	Time separator **	**COLON** (default), COMMA, DOT
BRIGHTNESS	Brightness of the backlight	OFF, **LOW** (default), MED, HIGH
AUTOFFTIME	Auto off time	0-60 seconds, **0**=Always On (default)
BATTERYINSTALLED	Power source	NONE, NiMH, Liion **ALK** (default)
POWERSAVEMODE	Power save mode	**NONE** (default), LOW, HIGH
CONSNUM	Consecutive numbering	0–999999, **0** (default)
CONSTUP	Consecutive number start-up value	0–999999, **0** (default)
UID	ID of the indicator	Up to 8 alphanumeric characters, **1** (default)
KYBDLK	Keyboard lock (disable keypad except power)	**OFF** (default), ON
ZERONLY	Disable all keys except ZERO and power	**OFF** (default), ON
KHOLDTIME	Key hold time (in tenths of a second); 20 equals 2 seconds	10–50, **20** (default)
KHOLDINTERVAL	Key hold time interval; the amount of time between increments during a key hold (in twentieths of a second); 2 equals a tenth of a second (10 increments per second during a key hold)	1–100, **2** (default)
LOCALE	Enable gravity compensation	**OFF** (default), FACTOR
GRAV.LOC	Origin gravity factor (in m/s^2) for gravity compensation	9.00000–9.99999, **9.80665** (default)
DEST.GRAV.LOC	Destination gravity factor (in m/s^2) for gravity compensation	9.00000–9.99999, **9.80665** (default)
** Date/time functions only available with RTC option		

Table 7-8. Feature Commands

© Rice Lake Weighing Systems ● All Rights Reserved

7.9 Print Format Commands

Command	Description	Values
GFMT GFMT.PORT	Gross demand print format string	For the .PORT commands, specify the port name as RS232-1, USB, NONE *Example: To send the Gross format out RS-232, send:* GFMT.PORT=RS232-1 See Section 8.0 on page 57 for information about demand print format strings
NFMT NFMT.PORT	Net demand print format string	
ACCFMT ACC.PORT	Accumulator print format string	

Table 7-9. Print Format Commands

7.10 Weigh Mode Commands

These commands function in the weigh mode. Non weight related commands work in setup mode.

Command	Description	Values
P	Returns what the indicator is currently displaying	--
ZZ	Returns what the indicator is currently displaying; as well as an additional number representing the currently displayed annunciators	See Section 10.2 on page 61
CONSNUM	Returns current consecutive number value	0–999999, **0** (default)
UID	Sets or returns the unit ID	Up to 8 alphanumeric characters, **1** (default)
SD	Sets or returns the current system date **	*MMDDYY*, *DDMMYY, YYMMDD,* or *YYDDMM.* Enter six-digit date using the year-month-day order specified for the DATEFMT parameter, using only the last two digits of the year; The current system date is returned by only sending *SD*
ST	Sets or returns the current system time **	*HHMM* (enter using 24-hour format) The current system time is returned by only sending *ST*
STS	Sets or returns the current system time with seconds **	*HHMMSS* (enter using 24-hour format) The current system time is returned by only sending *STS*
RS	Resets system	Soft reset; Used to perform a power up reset of the indicator without resetting the configuration to the factory defaults
SX	Starts all serial data streams	--
EX	Stops all serial data streams	--
SX#*p*	Starts serial data stream for port *p*	OK *or* ?? An EX command sent while in setup mode does not take effect until the indicator is returned to weigh mode
EX#*p*	Stops serial data stream for port *p*	
SF#*n*	Returns a single stream frame from scale *n* using the standard Rice Lake format.	--
XA#*n*	Returns the accumulator value in displayed units	nnnnnnnnnn UU
XAP#*n*	Returns the accumulator value in primary units	
XAS#*n*	Returns the accumulator value in secondary units	
XG#*n*	Returns the gross weight in displayed units	nnnnnnnnnn UU
XGP#*n*	Returns the gross weight in primary units	
XGS#*n*	Returns the gross weight in secondary units	
XN#*n*	Returns the net weight in displayed units	nnnnnnnnnn UU
XNP#*n*	Returns the net weight in primary units	
XNS#*n*	Returns the net weight in secondary units	
XT#*n*	Returns the tare weight in displayed units	nnnnnnnnnn UU
XTP#*n*	Returns the tare weight in primary units	
XTS#*n*	Returns the tare weight in secondary units	
For commands ending with #*n*, n is the scale number (1); For commands ending with #*p*, p is the port number (1)		
** Date/time functions only available with RTC option		

Table 7-10. Weigh Mode Commands

8.0 Print Formatting

The 380/380X/381 provides three print formats, GFMT, NFMT and ACCFMT, which determine the format of the printed output when the **Print** key is pressed. If a tare has been entered or acquired, NFMT is used; otherwise, GFMT is used.

Each print format can be customized to include information, such as company name and address, on printed tickets. The print format is programmed using a combination of print formatting tokens (as in Table 8-1) and ASCII characters. The configuration may contain a total of up to 300 characters. The output sent to the printer may contain up to 400 characters. Use the print format menu through front panel of the indicator or revolution to customize the print format.

NOTE: Press the down arrow to view the ASCII character decimal value on the second menu level.
NOTE: See Section 10.6 on page 66 to view the ASCII character chart.

8.1 Print Formatting Tokens

Table 8-1 lists tokens which can be used to configure the print formats. Tokens included in the format strings must be enclosed between < and > delimiters. Characters outside of the delimiters are printed as text on the ticket. Text characters can include ASCII characters which can be printed by the output device.

Token	Description
<G>	Gross weight in displayed units
<G/P>	Gross weight in Primary units
<G/S>	Gross weight in Secondary units
<N>	Net weight in displayed units
<N/P>	Net weight in Primary units
<N/S>	Net weight in Secondary units
<T>	Tare weight in displayed units
<T/P>	Tare weight in Primary units
<T/S>	Tare weight in Secondary units
<A>	Accumulated weight in displayed units
<AC>	Number of accumulator events (5 digit counter) **
<AD>	Date of last accumulator event ** ***
<AT>	Time of last accumulator event ** ***
<UID>	Unit ID number (up to 8 characters)
<CN>	Consecutive number (up to 8 numeric digits)
<NLnn>	New line (nn = number of termination (<CR/LF> or <CR>) characters)*
<SPnn>	Space (nn = number of spaces)*
<SU>	Toggle weight data format (formatted/unformatted)
<TI>	Time ***
<DA>	Date (prints 4 digit year) ***
<TD>	Time & Date ***
<nnn>	ASCII character (nnn=decimal value of ASCII character); used for inserting control characters (STX, for example) in the print stream
Gross, net, and tare weights are 9 digits in length, including sign (10 digits with decimal point) followed by a space and a two-digit units identifier. Total field length with units identifier is 12 (or 13) characters.	
For tare weights only, PT is added to the output if the Tare is a Keyed tare, adding 3 additional characters to the total field length.	
UID and consecutive number (CN) fields are up to 8 characters in length.	
* If nn is not specified, 1 is assumed. Value must be in the range 1–99.	
** Accumulator events print 0 unless the accumulator is turned on	
*** Date and time function only available with RTC option installed	

Table 8-1. Print Format Tokens

© Rice Lake Weighing Systems ● All Rights Reserved

Table 8-2 lists the default 380/380X/381 print formats:

Format	Default Format String	When Used
GFMT	GROSS<G><NL2>	Weigh mode – no tare in system
NFMT	GROSS<G><NL>TARE<SP><T><NL>NET<SP2><N><NL2>	Weigh mode – tare in system
ACCFMT	ACCUM <A>	Accumulator demand print format string

Table 8-2. Default Print Formats

NOTE: The <G/P>, <N/P> and <T/P> tokens (Table 8-1 on page 57) print the gross, net and tare weights in primary units.

NOTE: The <G/S>, <N/S> and <T/S> tokens (Table 8-1 on page 57) print the gross, net and tare weights in secondary units.

NOTE: The 400 character limit of each print format string includes the output field length of the print formatting tokens, not the token length. For example, if the indicator is configured to display a decimal point, the <G> token generates an output field of 13 characters: the 10 character weight value (including decimal point), one space, and a two-digit units identifier. Configured print format string including tokens is limited to 300 characters.

NOTE: PT (preset tare) is added to the tare weight if tare was keyed in.

8.2 Customizing Print Formats

The GFMT, NFMT and ACCFMT formats can be customized using the print format menu (PFmnt) via the front panel. See Section 4.3.6 on page 45 for the print format menu structure. To access the print format menu the indicator must be in setup mode (Section 1.3 on page 8).

Using the Front Panel

Use the print format menu to customize the print formats and to edit the print format strings by changing the ASCII characters in the format string. See Section 3.3.2 on page 34 for the alphanumeric entry procedure to edit the print format string.

NOTE: Some characters cannot be displayed on the 380/380X/381 front panel, see the ASCII character chart in Section 10.6 on page 66 for available characters. The 380/380X/381 can send or receive many ASCII characters; the character printed depends on the particular ASCII character set implemented for the receiving device.

8.3 Non-Human Readable Characters

ASCII characters 0 through 31 are non-human readable characters. Since these characters are not visible, they do not appear as selectable options in a 380/380X/381 print format. To include a special character in a print format, the decimal equivalent needs to be used. For example, the special character *Esc* would be <27> or 60, 50, 55, 62 (less the commas).

Examples of a print release command for a TMU295 in the GROSS format:

Print Format:
GROSS<G><NL2><TD><NL><27>q

In Revolution:

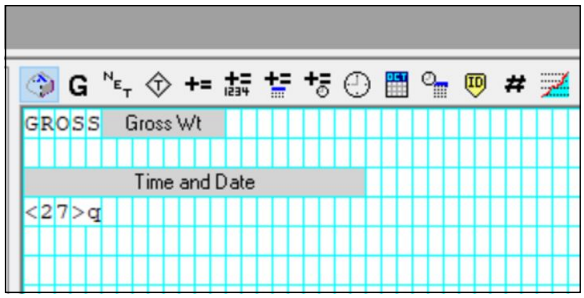

Print Format:
GROSS<G><NL2><TD><NL><27><113>

In Revolution:

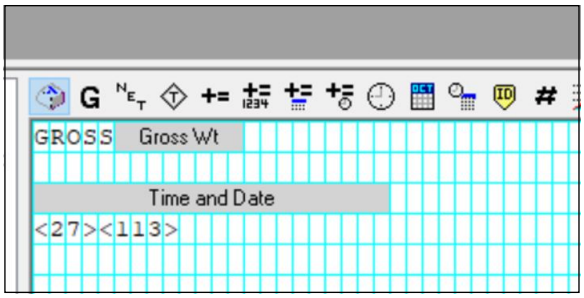

9.0 Maintenance

The maintenance information in this manual is designed to cover aspects of maintaining and troubleshooting the 380/380X/381 indicator. Contact the local Rice Lake Weighing Systems dealer if a problem requires technical assistance.

NOTE: Have the scale or indicator model number and serial number available when calling for assistance.

9.1 Maintenance Checkpoints

The scale must be checked frequently to determine when a calibration is required. It is recommended a zero calibration be checked every other day and a calibration checked every week for several months after installation. Observe the results and change the period between calibration checks, depending upon the accuracy desired.

NOTE: Establish a routine inspection procedure. Report changes in the scale function to the individual or department responsible for the scale's performance.

9.2 Field Wiring

If a problem with the wiring is suspected, check the electrical portion of the scale.

- Check for proper interconnections between the components of the system
- Check wiring meets all specifications in the installation drawings
- Check all wiring and connections for continuity, shorts and grounds using an ohmmeter with the scale off
- Check for loose connections, poor solder joints, shorted or broken wires and unspecified grounds in wiring; these issues cause erratic readings and shifts in weight readings
- Check all cable shields to ensure grounding is made at only the locations specified in the installation drawings

9.3 Troubleshooting

Table 9-1 lists general troubleshooting tips for hardware and software error conditions

Symptom	Possible Cause	Remedy
380/380X/381 does not power up	Discharged Batteries	Test batteries, • 380 – Test each cell; If individual cells are < 1 VDC, or the total is < 4 VDC – replace all batteries • 380X – If the battery measures < 6.5 VDC, plug in the indicator to charge. – If Battery depletes rapidly, replace the battery pack. • 381-AA – Test each cell; If individual cells are < 1 VDC, or the total is < 4 VDC – replace all batteries • 381-NiMh – If the battery measures < 5 VDC, plug in the indicator to charge – If Battery depletes rapidly, replace the battery pack.
	Bad power supply	Check power supply; • Check presence of AC power – breaker tripped or unit unplugged • 380 and 381-AA – power supply outputs around 12 VDC – replace if not • 380X – internal power supply supplies 12 VDC to charger board – replace if not • 381-NiMH – charger supplies variable voltage; Voltage starts as 5.8 VDC and increases to over 7 VDC. If this does not happen, charger may need to be replaced
	In Bootmode	Remove and reapply power or fix cause for firmware update failure and repeat update
⊓⊓⊓⊓⊓⊓⊓ or ⊔⊔⊔⊔⊔⊔⊔	Over or under range scale condition	Check scale; For out-of -range conditions in total scale display, check all scale inputs for positive weight values
Serial port not responding	Configuration error	Ensure port TRIGGER parameter is set to CMD for command input; Software to check syntax
A/D scale out of range	Scale operation Load cell connection Bad load cell	Check source scale for proper mechanical operation Check load cell and cable connection Check 380/380X/381 operation with load cell simulator Check status of sense settings

Table 9-1. Basic Troubleshooting

© Rice Lake Weighing Systems ● All Rights Reserved

9.4 Board Replacement

IMPORTANT: Use anti-static protection for grounding and to protect components from electrostatic discharge (ESD) when working inside the 380/380X/381 enclosure. Procedures requiring work inside the 380/380X/381 must be performed by qualified service personnel only.

To replace a 380/380X/381 board, use the following procedure:

1. Remove the batteries or disconnect the external power to the indicator if being used.

CAUTION: Disconnecting the external power at the 380/380X/381 will activate the batteries if they are installed.

2. Remove front plate as described in Section 2.5 on page 13.
3. Label connections for re-installation to board.
4. Disconnect all connections from the board.
5. Remove the three corner nuts and one standoff securing the board and remove the board.
6. Place the replacement board onto the front plate and secure with previously removed nuts and standoff.
7. Reconnect all connections to the board. See Figure 2-12 on page 19 for details on the board connectors.
8. Replace the front plate and secure the screws as in Section 2.10 on page 23.

IMPORTANT: Always verify indicator has been returned back to a safe state with the proper installation of all connections and a complete functions test before reinstalling the front plate and returning the indicator back to service.

9.5 Updating Firmware

There are two ways to update the firmware; By using the Revolution software and a .bef file or by using a direct connection to the PC and an .exe file.

NOTE: Use Revolution version 3.33 or later.

NOTE: CAL jumper must be removed to update firmware. If CAL jumper is not removed, update will fail and message "The CPU board is in LEGAL state!" will display.

NOTE: Updating firmware defaults configuration settings.

9.5.1 With Revolution

Revolution is used to update the firmware of the 380/380X/381 indicator. The link to begin this process is available on the Revolution home screen. Connect to the indicator as in Section 6.1 on page 51.

9.5.2 Without Revolution

NOTE: All versions of the Synergy indicators use the same 380* firmware.

1. Download the new firmware from **www.ricelake.com/380**. Package will include two files with filenames that begin with '380_PN202264_Vx.xx'.
2. Connect indicator to computer via one of the following:
   - Micro USB (Figure 2-12 on page 19)
   - Serial connecter CN10 on the 380/380X (Section 2.8.2 on page 20)
   - External RJ-11 on the 381
3. Turn off indicator.
4. Press and hold ZERO while powering on the indicator. The display will remain off, but if indicator is connected to the PC via the USB, the PC will emit a sound indicating a USB connection to the PC is configured.
5. Run the * .exe file.
6. Select the COM port on the PC that is associated with the USB or RS-232 port.
7. Select Program and wait for **Firmware Updated Successfully** to display. When update process is complete, the 380/380X/381 indicator turns off.

10.0 Appendix

10.1 Error Messages

The 380/380X/381 provides a number of front panel error messages to assist in problem diagnosis. Table 10-1 lists these messages and their meanings.

Error Message	Description
-------	Overflow error – Weight value too large to be displayed
nnnnnnn	Gross > overload limit – Gross value exceeds overload limit; Check configuration or signal input level; Overload can be caused by input signal > 45 mV or common mode voltage > 950 mV
uuuuuuu	Gross < underload limit – Gross value exceeds underload limit
tArE in motion not ALLoWEd	Scrolls across display when attempting to perform a tare while weight is in motion, if in motion tares are not allowed
nEGAtiuE tArE not ALLoWEd	Scrolls across display when attempting to perform a negative tare, if a negative tare is not allowed
KEYEd tArE not ALLoWEd	Scrolls across display when attempting to perform a keyed tare, if a keyed tare is not allowed
tArE LArGEr tHAn CAPACitY not ALLoWEd	Scrolls across display when attempting to perform a tare larger than capacity, if it is not allowed
tArE ALrEAdY in SYStEM	Scrolls across display when attempting to perform a tare if a tare is already in the system, if tare is not configured to replace or remove
initiAL 2Ero FAiLEd	Scrolls across display when an attempt to perform an initial zero fails, only possible at startup
PLEASE WAit	Scrolls across display when calibrating

Table 10-1. Error Messages

10.2 ZZ EDP Command

The ZZEDP command can be used to remotely query whatever is being displayed on the LCD Display, along with a decimal number representing the annunciators currently lit. The format on the returned value is WWWWWW UU NNN in weight display modes, and VVVVVV NNN in non-weight display modes. NNN is a number between 0 and 4095, and is the sum of values representing the different annunciators (Table 10-2).

Example: If the annunciator status value returned for the ZZ command is 0145, the gross, standstill and lb annunciators are on. The number 0145 represents the sum of the values for the gross mode annunciator (16), the standstill annunciator (128) and the lb annunciator (1).

Decimal Value	Annunciator
1	lb units
2	kg units
4	Tare entered
8	Keyed tare entered
16	Gross
32	Net
64	Center of zero
128	Standstill
256	oz units
512	tn units
1024	t units
2048	g units

Table 10-2. Status Codes Returned on the ZZ Command

NOTE: Standstill bit is set when the In-Motion annunciator is NOT lit.

© Rice Lake Weighing Systems ● All Rights Reserved

10.3 Continuous Data (Stream) Output Formats

When the trigger setting for a port is set to STRIND or STRLFT, data is continuously streamed from the appropriate port in one of the four fixed format options.

Fixed Format Options:

- Rice Lake Weighing Systems (Section 10.3.1)
- Cardinal (Section 10.3.2)
- Avery Weigh-Tronix (Section 10.3.3 on page 63)
- Mettler Toledo (Section 10.3.4 on page 63)

10.3.1 Rice Lake Weighing Systems Stream Format (rLS)

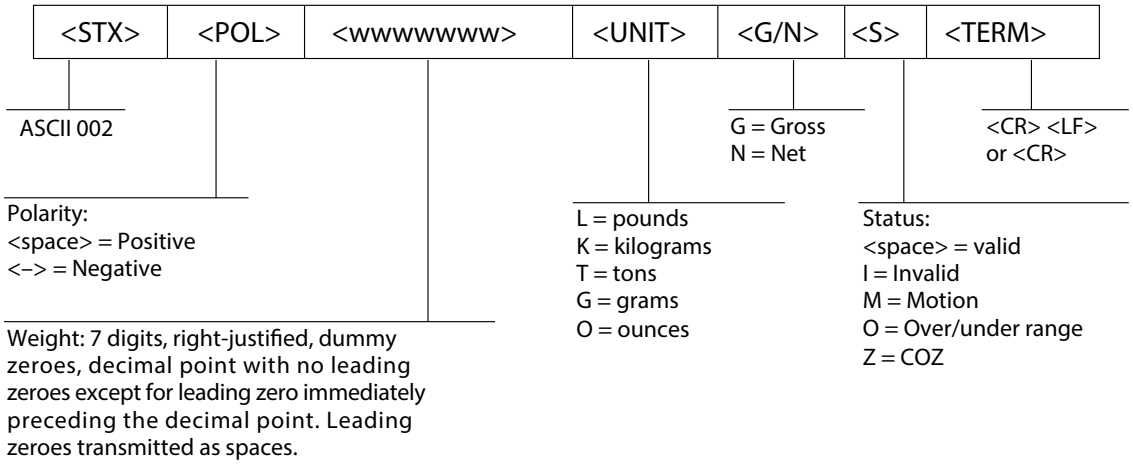

Figure 10-1. Rice Lake Weighing Systems Stream Data Format

10.3.2 Cardinal Stream Format (CrdnAL)

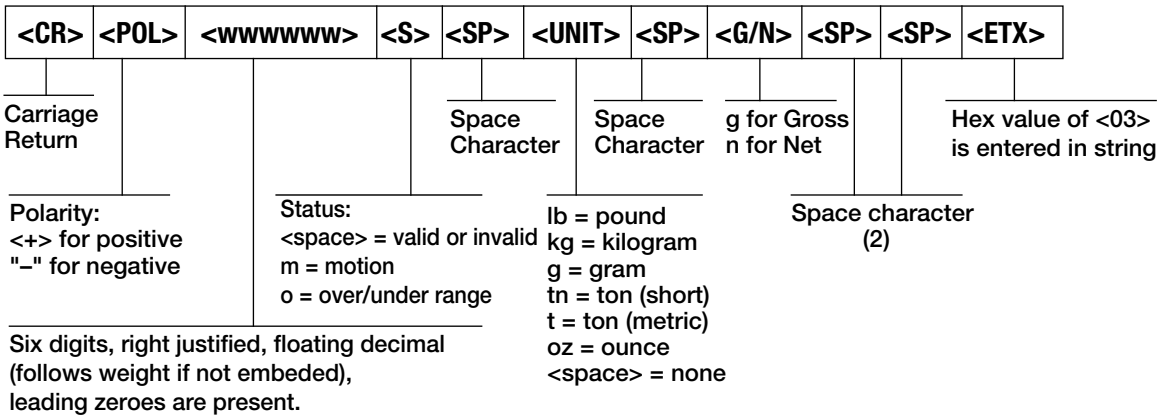

Figure 10-2. Cardinal Stream Data Format

10.3.3 Avery Weigh-Tronix Stream Format (AtrnH)

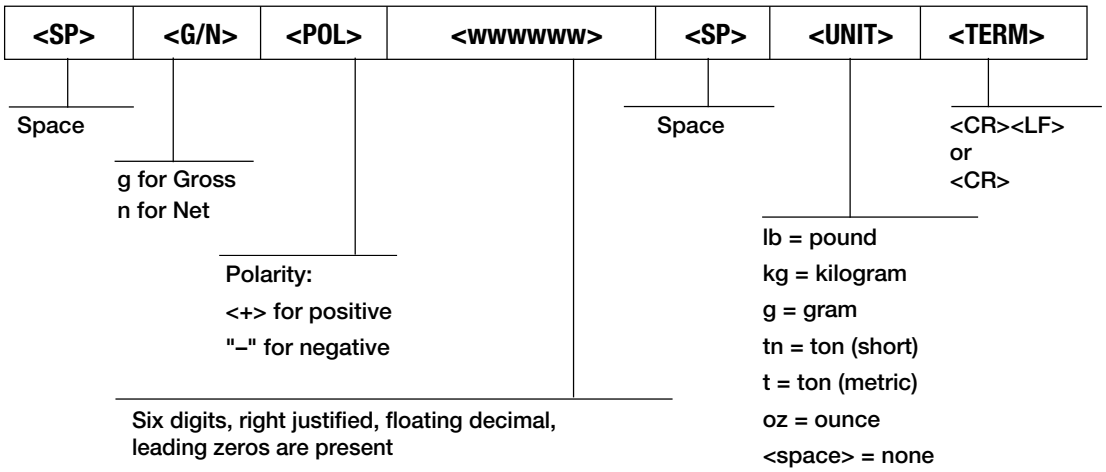

Figure 10-3. Avery Weigh-Tronix Stream Data Format

10.3.4 Mettler Toledo Stream Format (toLEdo)

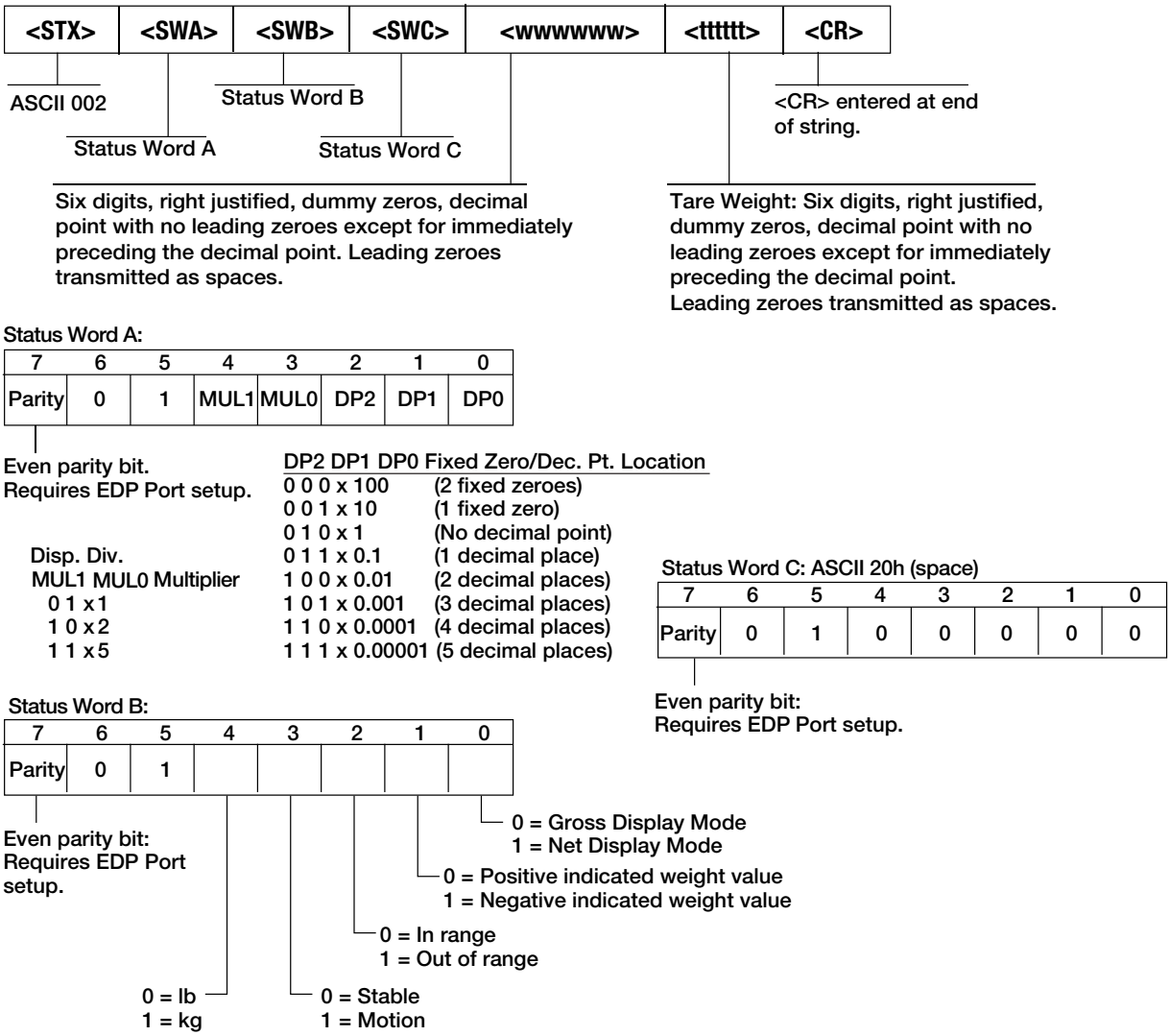

Figure 10-4. Mettler Toledo Stream Data Format

© Rice Lake Weighing Systems ● All Rights Reserved

10.4 Conversion Factors for Secondary Units

The 380/380X/381 has the capability to mathematically convert a weight into another unit of measurement and display the result with the press of the Units key. Available units are pounds (lb), kilograms (kg), tonnes (t), grams (g), short ton (tn) and ounces (oz).

Secondary units can be specified on the Format menu using the ***SECNDR*** parameter.

NOTE: Multipliers are preconfigured within the indicator.
NOTE: Ensure the secondary decimal point position is set appropriately for the scale capacity in the secondary units.

10.5 Digital Filtering

Digital filtering is used to create a stable scale reading in challenging environments. The 380/380X/381 allows selection of ***Digital Rolling Average Filtering*** (Section 10.5.1) or ***RAW*** (no filtering). See Section 4.3.1 on page 41 for configuration menu layout and the location of ***FLTCHN*** parameter.

The scale's sample rate effects all types of filtering. The A/D sample rate is selected by the ***SMPRAT*** scale parameter. The A/D sample rate is the number of weight readings the indicator takes per second (***SMPRAT***). This can be 5, 6, 10, 12, 20, 25, 40, 50, 80, or 100 hertz (readings per second). Set the A/D sample rate to the lowest setting required for the application. Lower settings result in better stability.

10.5.1 Digital Rolling Average Filter (AVGONLY)

The digital rolling average filter uses mathematical averaging with three stages. These configurable stages control the effect of a single A/D reading on the displayed weight. When an A/D reading outside of a predetermined band (defined by the ***DFSENS*** and ***DFTHRH*** parameters) is encountered, the digital rolling average filter is overridden and the display jumps directly to the new value.

Digital Filter Stages (DGFLTR1-3)

The filter stages can each be set to a value of 1–256. The value assigned to each stage sets the number of readings received from the preceding filter stage before averaging. Setting the filter stages to 1 effectively disables the rolling filter.

A rolling average is passed to successive filtering stages for an overall filtering effect which is effectively a weighted average of the product of the values assigned to the filter stages (***DGFLTR1 x DGFLTR2 x DGFLTR3***) within a time frame corresponding to the sum of the values (***DGFLTR1 + DGFLTR2 + DGFLTR3***).

Digital Filter Sensitivity (DFSENS) and Threshold (DFTHRH)

The rolling averaging filter can be used by itself to eliminate vibration effects, but heavy filtering also increases settling time. The ***DFSENS*** and ***DFTHRH*** parameters can be used to temporarily override filter averaging and improve settling time.

- ***DFSENS*** specifies the number of consecutive A/D readings which must fall outside the filter threshold (***DFTHRH***) before filtering is suspended
- ***DFTHRH*** sets a controlling threshold delta value, in display divisions; the indicator monitors both the incoming filtered and unfiltered A/D values; ***DFTHRH*** is the maxim allowable difference between the filtered and unfiltered A/D values for which the filter will remain engaged; filtering is suspended when the difference between the filtered and unfiltered A/D values is greater than the ***DFTHRH*** value for more than the specified number (***DFSENS***) of consecutive readings; filtering is reengaged when two consecutive A/D readings are within the ***DFTHRH*** threshold delta value; Set ***DFTHRH*** to ***NONE*** to turn off the filter override

Digital Rolling Average Filter Procedure

1. In setup mode, set the rolling filter stage parameters (***DGFLTR1-3***) to 1.
2. Set ***DFTHRH*** to ***NONE***.
3. Return to weigh mode.
4. Remove all weight from scale, then watch the indicator to determine the magnitude of vibration effects on the scale.
5. Record weight below which all but a few readings fall. This value is used to calculate the ***DFTHRH*** parameter in step 8.

   Example – if a heavy-capacity scale (10000 x 5 lb) produces vibration-related readings of up to 50 lb, with occasional spikes up to 75 lb, record 50 as the threshold weight value.
6. Place the indicator in setup mode and set the filter stage parameters (***DGFLTR1-3***) to eliminate the vibration effects on the scale (leave ***DFTHRH*** set to ***NONE***).
7. Find the lowest effect value for the ***DGFLTR1-3*** parameters.

If needed, the digital filter cutout sensitivity (***DFSENS***) and the digital filter cutout threshold (***DFTHRH***) can be used to reset the digital rolling average filter so the response to a rate change is faster.

8. Calculate the ***DFTHRH*** parameter value by converting the weight value recorded in step 5 to display divisions (***Threshold_Weight_Value / Display_Divisions***).

   In the example in step 5, with a threshold value of 50, and a display divisions value of 5, set the DFTHRH parameter to 10 display divisions.
9. Set the ***DFSENS*** parameter high enough to ignore transient peaks. Longer transients (typically caused by lower vibration frequencies) causes more consecutive out-of-band readings; set the ***DFSENS*** parameter higher to counter low frequency transients.

10.5.2 Regulatory Mode Functions

Regulatory Parameter	Weight On Scale	Tare In System	Front Panel Key Tare	Front Panel Key Zero
NTEP	Zero	No	“000000”	Zero
		Yes	Clear tare	Zero
	Negative	No	No action	Zero
		Yes	Clear tare	Zero
	Positive	No	Tare	Zero
		Yes	Tare	Zero
Canada	Zero	No	“000000”	Zero
		Yes	Clear tare	Clear tare
	Negative	No	No action	Zero
		Yes	Clear tare	Clear tare
	Positive	No	Tare	Zero
		Yes	No action	Clear tare
OIML	Zero	No	“000000”	Zero
		Yes	Clear tare	Zero and Clear tare
	Negative	No	No action	Zero
		Yes	Clear tare	Zero and Clear tare
	Positive	No	“000000”	Zero
		Yes	Tare	Zero and Clear Tare
None	Zero	No	“000000”	Zero
		Yes	Clear tare	Clear tare
	Negative	No	No action	Zero
		Yes	Clear tare	Clear tare
	Positive	No	Tare	Zero
		Yes	Clear tare	Clear tare

Table 10-3. Tare and Zero Key Functions for REGULA Parameter Settings

© Rice Lake Weighing Systems ● All Rights Reserved

10.6 ASCII Character Chart

Use the decimal values for ASCII characters listed in Table 10-4 when specifying print format strings on the 380/380X/381 PFORMT menu (Section 4.3.6 on page 45). The actual character printed depends on the character mapping used by the output device.

The 380/380X/381 can send or receive ASCII character values (decimal 0–255), but the indicator display is limited to numbers, uppercase, unaccented letters and a few special characters. See Section 10.7 on page 67 for information about the 380/380X/381 LCD display.

Control	ASCII	Dec	Hex	ASCII	Dec	Hex	ASCII	Dec	Hex	ASCII	Dec	Hex
Ctrl-@	NUL	00	00	space	32	20	@	64	40	`	96	60
Ctrl-A	SOH	01	01	!	33	21	A	65	41	a	97	61
Ctrl-B	STX	02	02	“	34	22	B	66	42	b	98	62
Ctrl-C	ETX	03	03	#	35	23	C	67	43	c	99	63
Ctrl-D	EOT	04	04	$	36	24	D	68	44	d	100	64
Ctrl-E	ENQ	05	05	%	37	25	E	69	45	e	101	65
Ctrl-F	ACK	06	06	&	38	26	F	70	46	f	102	66
Ctrl-G	BEL	07	07	’	39	27	G	71	47	g	103	67
Ctrl-H	BS	08	08	(	40	28	H	72	48	h	104	68
Ctrl-I	HT	09	09	)	41	29	I	73	49	i	105	69
Ctrl-J	LF	10	0A	*	42	2A	J	74	4A	j	106	6A
Ctrl-K	VT	11	0B	+	43	2B	K	75	4B	k	107	6B
Ctrl-L	FF	12	0C	,	44	2C	L	76	4C	l	108	6C
Ctrl-M	CR	13	0D	-	45	2D	M	77	4D	m	109	6D
Ctrl-N	SO	14	0E	.	46	2E	N	78	4E	n	110	6E
Ctrl-O	SI	15	0F	/	47	2F	O	79	4F	o	111	6F
Ctrl-P	DLE	16	10	0	48	30	P	80	50	p	112	70
Ctrl-Q	DC1	17	11	1	49	31	Q	81	51	q	113	71
Ctrl-R	DC2	18	12	2	50	32	R	82	52	r	114	72
Ctrl-S	DC3	19	13	3	51	33	S	83	53	s	115	73
Ctrl-T	DC4	20	14	4	52	34	T	84	54	t	116	74
Ctrl-U	NAK	21	15	5	53	35	U	85	55	u	117	75
Ctrl-V	SYN	22	16	6	54	36	V	86	56	v	118	76
Ctrl-W	ETB	23	17	7	55	37	W	87	57	w	119	77
Ctrl-X	CAN	24	18	8	56	38	X	88	58	x	120	78
Ctrl-Y	EM	25	19	9	57	39	Y	89	59	y	121	79
Ctrl-Z	SUB	26	1A	:	58	3A	Z	90	5A	z	122	7A
Ctrl-[	ESC	27	1B	;	59	3B	[	91	5B	{	123	7B
Ctrl-\	FS	28	1C	<	60	3C	\	92	5C	|	124	7C
Ctrl-]	GS	29	1D	=	61	3D	]	93	5D	}	125	7D
Ctrl-^	RS	30	1E	>	62	3E	^	94	5E	~	126	7E
Ctrl-_	US	31	1F	?	63	3F	_	95	5F	DEL	127	7F

Table 10-4. ASCII Character Chart

10.7 Front Panel Display Characters

Refer to Figure 10-5 for the seven-segment LCD character set used on the 380/380X/381 front panel display for alphanumeric characters.

!		7		Ff		Ss	
"		8		Gg		Tt	
+		9		Hh		Uu	
-		:		Ii		Vv	
.		;		Jj		Ww	
/		<		Kk		Xx	
0		=		Ll		Yy	
1		>		Mm		Zz	
2		Aa		Nn		[	
3		Bb		Oo		\	
4		Cc		Pp		]	
5		Dd		Qq		_	
6		Ee		Rr			

Figure 10-5. Display Characters

© Rice Lake Weighing Systems ● All Rights Reserved

11.0 Compliance

EU DECLARATION OF CONFORMITY

EU-KONFORMITÄTSERKLÄRUNG
DÉCLARATION UE DE CONFORMITÉ

Rice Lake Weighing Systems
230 West Coleman Street
Rice Lake, Wisconsin 54868
United States of America

Type/Typ/Type: 380 Indicator Series

English: We declare under our sole responsibility that the products to which this declaration refers to, is in conformity with the following standard(s) or other regulations document(s).

Deutsch: Wir erklären unter unserer alleinigen Verantwortung, dass die Produkte auf die sich diese Erklärung bezieht, den folgenden Normen und Regulierungsbestimmungen entsprechen.

Francais: Nous déclarons sous notre responsabilité que les produits auxquels se rapporte la présente déclartion, sont conformes à la/aux norme/s suivante ou au/aux document/s normatif/s suivant/s.

EU Directive	Certificates	Standards Used / Notified Body Involvement
2014/35/EU LVD	-	IEC 62368-1:2014
2014/30/EU EMC	-	IEC 61326-1:2020, IEC 61000-3-3:2013, IEC 61000-3-2:2018
2014/53/EU RED	-	EN 300 328:2019, EN 301 489-17:2020
2011/65/EU RoHS	-	EN 50581:2012

Signature: Derrick Bender

Name: Derrick Bender

Title: Compliance Engineer

Place: Rice Lake, WI. USA

Date: April 19, 2024

EU DECLARATION OF CONFORMITY

EU-KONFORMITÄTSERKLÄRUNG
DÉCLARATION UE DE CONFORMITÉ

Rice Lake Weighing Systems
230 West Coleman Street
Rice Lake, Wisconsin 54868
United States of America

Type/Typ/Type: 380X Indicator Series

English We declare under our sole responsibility that the products to which this declaration refers to, is in conformity with the following standard(s) or other regulations document(s).

Deutsch Wir erklären unter unserer alleinigen Verantwortung, dass die Produkte auf die sich diese Erklärung bezieht, den folgenden Normen und Regulierungsbestimmungen entsprechen.

Francais Nous déclarons sous notre responsabilité que les produits auxquels se rapporte la présente déclartion, sont conformes à la/aux norme/s suivante ou au/aux document/s normatif/s suivant/s.

EU Directive	Certificates	Standards Used / Notified Body Involvement
2014/35/EU LVD	-	IEC 62368-1:2014
2014/30/EU EMC	-	IEC 61326-1:2020, IEC 61000-3-3:2013, IEC 61000-3-2:2018
2011/65/EU RoHS	-	EN 50581: 2012

Signature: Derrick Bender

Name: Derrick Bender

Title: Compliance Engineer

Place: Rice Lake, WI USA

Date: April 19, 2024

© Rice Lake Weighing Systems ● All Rights Reserved

EU DECLARATION OF CONFORMITY

EU-KONFORMITÄTSERKLÄRUNG
DÉCLARATION UE DE CONFORMITÉ

Rice Lake Weighing Systems
230 West Coleman Street
Rice Lake, Wisconsin 54868
United States of America

Type/Typ/Type: 381 Indicator Series

English We declare under our sole responsibility that the products to which this declaration refers to, is in conformity with the following standard(s) or other regulations document(s).

Deutsch Wir erklären unter unserer alleinigen Verantwortung, dass die Produkte auf die sich diese Erklärung bezieht, den folgenden Normen und Regulierungsbestimmungen entsprechen.

Francais Nous déclarons sous notre responsabilité que les produits auxquels se rapporte la présente déclartion, sont conformes à la/aux norme/s suivante ou au/aux document/s normatif/s suivant/s.

EU Directive	Certificates	Standards Used / Notified Body Involvement
2014/35/EU LVD		EN 61326-1:2020
2014/30/EU EMC		EN 61326-1:2020, EN 61000-3-2013, EN 61000-3-2:2018
2011/65/EU RoHS		EN 50581: 2012

Signature: Derrick Bender

Name: Derrick Bender

Title: Compliance Engineer

Place: Rice Lake, WI. USA

Date: June 30, 2023

UK CA

UK DECLARATION OF CONFORMITY

Rice Lake Weighing Systems
230 West Coleman Street
Rice Lake, Wisconsin 54868
United States of America

RICE LAKE WEIGHING SYSTEMS

Type: 380 Indicator Series

English We declare under our sole responsibility that the products to which this declaration refers to, is in conformity with the following standard(s) or other regulations document(s).

UK Regulations	Certificates	Standards Used / Approved Body Involvement
2016/1101 Low Voltage	-	IEC 62368-1:2014
2016/1091 EMC	-	IEC 61326-1:2020, IEC 61000-3-3:2013, IEC-3-2:2018
2017/1206 Radio	-	EN 300 328: 2019, EN 301 489-17:2020
2012/3032 RoHS	-	EN 50581:2012

Signature: Derrick Bender

Name: Derrick Bender

Title: Compliance Engineer

Place: Rice Lake, WI. USA

Date: April 19, 2024

© Rice Lake Weighing Systems ● All Rights Reserved

UK DECLARATION OF CONFORMITY

Rice Lake Weighing Systems
230 West Coleman Street
Rice Lake, Wisconsin 54868
United States of America

Type: 380X Indicator Series

English We declare under our sole responsibility that the products to which this declaration refers to, is in conformity with the following standard(s) or other regulations document(s).

UK Regulations	Certificates	Standards Used / Approved Body Involvement
2016/1101 Low Voltage	-	IEC 62368-1:2014
2016/1091 EMC	-	IEC 61326-1:2020, IEC 61000-3-3:2013, IEC 61000-3-2:2018
2012/3032 RoHS	-	EN 50581: 2012

Signature: Derrick Bender

Name: Derrick Bender

Title: Compliance Engineer

Place: Rice Lake, WI. USA

Date: April 19, 2024

UK CA

UK DECLARATION OF CONFORMITY

Rice Lake Weighing Systems
230 West Coleman Street
Rice Lake, Wisconsin 54868
United States of America

RICE LAKE WEIGHING SYSTEMS

Type: 381 Indicator Series

English We declare under our sole responsibility that the products to which this declaration refers to, is in conformity with the following standard(s) or other regulations document(s).

UK Regulations	Certificates	Standards Used / Approved Body Involvement
2016/1101 Low Voltage		EN 61326-1:2020
2016/1091 EMC		EN 61326-1:2020, EN 61000-3:2013, EN 61000-3-2:2018
2012/3032 RoHS		EN50581: 2012

Signature: Derrick Bender

Name: Derrick Bender

Title: Compliance Engineer

Place: Rice Lake, WI. USA

Date: June 30, 2018

© Rice Lake Weighing Systems ● All Rights Reserved

12.0 Specifications

380 (PN 202711)

Power
Four Alkaline C-Cell Batteries
Optional 115/230 VAC to 12 V adapter

Power Consumption
6 W max with optional external power adapter

Battery Life
100 hours, one 350Ω load cell, no backlight
45 hours, four 350Ω load cells, low backlight
20 hours, eight 350Ω load cells, low backlight

Excitation Voltage
5 VDC, 8 x 350Ω or 16 x 700Ω load cells

Analog Signal Input Range
-0.3 mV to +30 mV
Common Mode Voltage 0.7 V to 3.3 V

Analog Signal Sensitivity
1 µV/graduation recommended

A/D Sample Rate
Software Selectable (Hz)
5, 6, 10, 12, 20, 25, 40, 50, 80, 100

Resolution
Internal: 8,000,000 counts
Display: 100,000

System Linearity
Within 0.01% full scale

Communication Ports
One full-duplex RS-232 (three-wire)
One USB 2.0

Status Annunciators
g, lb, t, tn, kg, oz, battery level, PT, LT, gross, zero, unstable, net

Display
Six 1.0 in (25 mm) tall, LCD digits

Keys / Buttons
Five tactile buttons

Dimensions (L x W x H)
11.58 x 74.53 x 8.57 in (294 x 115 x 218 mm)

Temperature Range
Legal: 14 to 104°F (-10 to 40°C)
Industrial: 14 to 122°F (-10 to 50°C)

Rating/Material
Rating: IP66
Material: Stainless Steel

Weight
6.25 lb (3 kg)

Warranty
Two-year limited warranty

EMC Immunity
10 V/m

Certifications and Approvals

380 Universal

NTEP
CoC Number: 21-051
Accuracy Class: III / IIIL; n_{max}: 10 000d

Measurement Canada Approved

Measurement Canada
Approval Number: AM-6184
Accuracy Class: III / IIIHD; n_{max}: 10 000

UL
File Number: E151461

380X (PN 214337)

Power

Battery: Lithium Ion
Charger: 120VAC Internal

Power Consumption

25 W max with internal power

Battery Life

45 hours, one 350Ω load cell, no backlight
15 hours, four 350Ω load cells, no backlight
10 hours, eight 350Ω load cells, backlight

Excitation Voltage

5 VDC, 8 x 350Ω or 16 x 700Ω load cells

Analog Signal Input Range

-0.3 mV to +30 mV
Common Mode Voltage 0.7 V to 3.3 V

Analog Signal Sensitivity

1 µV/graduation recommended

A/D Sample Rate

Software Selectable (Hz)
5, 6, 10, 12, 20, 25, 40, 50, 80, 100

Resolution

Internal:	8,000,000 counts
Display:	100,000

System Linearity

Within 0.01% full scale

Communication Ports

One full-duplex RS-232 (three-wire)
One USB 2.0

Status Annunciators

g, lb, t, tn, kg, oz, battery level, PT, LT, gross, zero, unstable, net

Display

Six 1.0 in (25 mm) tall, LCD digits

Keys / Buttons

Five tactile buttons

Dimensions (L x W x H)

11.58 x 4.53 x 8.57 in (294 x 115 x 218 mm)

Temperature Range

Legal:	14 to 104°F (-10 to 40°C)
Industrial:	14 to 122°F (-10 to 50°C)

Rating/Material

Rating:	IP69K
Material:	304 Stainless Steel

Weight

6.25 lb (3 kg)

Warranty

One-year limited warranty on Battery
Two-year limited warranty on Indicator and Parts

EMC Immunity

10 V/m

Certifications and Approvals

NTEP
CoC Number: 21-051
Accuracy Class: III / IIIL; n_{max}: 10 000

Measurement Canada Approved

Measurement Canada
Approval Number: AM-6184
Accuracy Class: III / IIIHD; n_{max}: 10 000

© Rice Lake Weighing Systems ● All Rights Reserved

381-AA (PN 215695) / 381-NiMH (PN 215696)

Power

Battery: AA or Nickel Metal Hydride (NiMH)
381-AA Adapter: 115/230 VAC to 12 VDC
381-NiMH Charger: 115/230 VAC

Power Consumption

AA: input 0.8 A (6 W while using AC adapter)
NiMH: input of 0.35 A

Battery Life

AA:
40 hours, one 350Ω load cell, low backlight
20 hours, four 350Ω load cell, low backlight
12 hours, eight 350Ω load cell, low backlight
NiMH:
35 hours, one 350Ω load cell, low backlight
18 hours, four 350Ω load cell, low backlight
10 hours, eight 350Ω load cell, low backlight

Excitation Voltage

5 VDC, 8 x 350Ω or 16 x 700Ω load cells

Analog Signal Input Range

-0.3 mV to +30 mV
common mode voltage 0.7 V to 3.3 V

Analog Signal Sensitivity

1 µV/graduation recommended

A/D Sample Rate

Software Selectable (Hz)
5, 6, 10, 12, 20, 25, 40, 50, 80, 100

Resolution

Internal:	8,000,000 counts
Display:	100,000

System Linearity

Within 0.01% full scale

Communication Ports

One full-duplex RS-232 (three-wire)
One USB 2.0

Status Annunciators

g, lb, t, tn, kg, oz, battery level, PT, LT, gross, zero, unstable, net

Display

Six 1.0 in (25 mm) tall, LCD digits

Keys / Buttons

Five tactile buttons

Dimensions (L x W x H)

8.50 x 3.17 x 5.06 in (215.8 x 80.5 x 128.5 mm)

Temperature Range

Legal:	14 to 104°F (-10 to 40°C)
Industrial:	14 to 122°F (-10 to 50°C)

Rating/Material

AA Battery:	IP54, ABS
NiMH Battery:	IP66, ABS

Warranty

One-year limited warranty on Battery
Two-year limited warranty on Indicator and Parts

EMC Immunity

10 V/m

Certifications and Approvals

NTEP
CoC Number: 21-051
Accuracy Class: III / IIIL; n_{max}: 10 000

Measurement Canada Approved

Measurement Canada
Approval Number: AM-6184
Accuracy Class: III / IIIHD; n_{max}: 10 000

© Rice Lake Weighing Systems Content subject to change without notice.

230 W. Coleman St. • Rice Lake, WI 54868 • USA USA: 800-472-6703 • International: +1-715-234-9171